DESIGN GUIDELINES

ARCHITECTURAL
SIGNAGE
LANDSCAPE

LARKRIDGE
SEC I-25 and Colorado 7
THORNTON, COLORADO

By:

MCG Architecture
5300 DTC Parkway, Suite 450
Greenwood Village, Colorado

October 8, 2004

For:

Jordon Perlmutter & Co.
1601 Blake St., Suite 600
Denver, CO 80202

LARKRIDGE
ARCHITECTURAL DESIGN STANDARDS
THORNTON, COLORADO
10/18/2004

Table of Contents

4.0 Introduction to Landscape Design Standards

5.0 Landscape Design Standards

6.0 Landscape Appendix

LARKRIDGE
ARCHITECTURAL DESIGN STANDARDS
THORNTON, COLORADO
10/18/2004

1.0 Introduction to Architectural Design Standards

1.1 Statement of Intent

The Larkridge development will accommodate a variety of Retail Tenants with a wide range of square foot requirements. Architectural standards are intended to set a high quality of design compatibility throughout Larkridge and establish a sense of a commercial destination, demonstrating a clearly defined district. Building architecture, landscaping, plaza areas, pedestrian pathways, and boundaries collectively establish a sense of retail village and human scale. These standards result in an attractive, comfortable environment where people can shop and work in a stimulating community atmosphere.

1.2 Architectural Character

The architectural character is intended to reflect a sense of high quality and timeless design. The language will be one that fits with the land and the surrounding community. High quality materials together with thoughtfully designed forms will establish this as an exceptional retail development.

Materials and forms will be selected to achieve the following goals:

- Create a timeless design with enduring forms and qualities.
- Create attractive street fronts and providing connecting walkways, while accommodating vehicular movement.
- Develop a sense of place that fits within the context of Larkridge.
- Provide high level of design quality.
- Encourage creative design.
- Design with a view toward the future. Maintain a long-term commitment to the future of the community.
- Design and build with maintenance in mind.

1.3 Specific Site Design

Building design shall contribute to the uniqueness of Larkridge with predominant materials, elements, features, color range and activity areas tailored specifically to the site and its context. In the case of this multiple building development, each individual building shall include predominant characteristics shared by all buildings in Larkridge.
Building Categories are based on location on site, building size, and probable use. Where no definition by group is given, the requirement, policy, or standard shall apply to all buildings.

2.0 Architectural Design Standards

2.1 General Building Design Standards

All exterior building elevations, lighting and sidewalk design must be submitted to the Landlord for approval.

2.1.1. Building Exterior Materials (Refer to attached Material and Color Board photos)

a) Exterior materials shall be chosen based on suitability, durability, and visual continuity.
b) Building materials shall be selected to provide an appropriate variety of textures per building facade, to provide visual balance, and to avoid an excessive variety of materials.
c) Building materials shall provide greater visual and textural interest at entrances and areas highly visible to the public.
d) Building material selection shall favor absorption rather than reflection of light.
e) Approved Materials: See Attached Photos of Materials Boards and Cultured Stone Sample
   - Natural stone
   - Synthetic stone products (bottom of stone 6" above grade minimum)
   - Integrally colored ground face or split face concrete block
   - Brick
   - Wood
   - EIFS (above 6'-0" above grade)
   - Accent architectural metal panel (not to exceed 5% of building elevation)
   - Architectural steel
   - Standing seam metal roofing
   - Storefront or curtain wall glazing systems
   - Tilt up concrete panels (with textured paint finish)
   - Wood or synthetic siding
f) Prohibited Materials and Treatments:
   - Metal wall panels exceeding 5% of building elevation.
   - Painted concrete masonry units
   - Full ceramic tile walls
   - Highly reflective wall treatments
   - The use of reflective glazing, with over 65% reflectivity
   - Exposed neon or color tubing (except with landlord & City of Thornton approval).
   - No untextured concrete or untreated CMU

2.1.2. Exterior Building Colors: (Refer to Attached Sheet 2.7.9)

a) Color palette should incorporate earth tones, indigenous to the region resulting in a cohesive, unified theme throughout the development. (Re: Materials Board at the end of this Section)
b) Monochromatic color schemes are discouraged.
c) Accent colors shall be compatible with base colors and shall be used sparingly.

d) Landlord must approve colors, materials and elevations.

2.1.3. Architectural Features

a) Architectural features, which project over the sidewalk, must be a minimum of nine (9) feet above the sidewalk. These include balconies, eaves, decorative roofs, entry features, trellises, canopies and fabric awnings. No such improvements shall encroach into bike or street travel lanes.
b) Parapets should have stepped cornices that provide a visual cap to the parapet and complement the architectural style of the center. Cornices can be fabricated from masonry, EIFS, stucco or extruded metal shapes.
c) All roof drainage shall be internal with internal overflow drains or through wall overflow roof scuppers.

2.1.4. Roof Top Unit (RTU) Screening

a) Parapets shall conceal flat roofs and rooftop equipment such as HVAC units from public view, from the interior of the site, from a distance of 200 feet.
b) Rear surfaces of parapets exposed to public view require approved architectural finishes.
c) Additional screen walls may be required for Roof Top Units where interior access access road elevation is higher than exterior parapet walls.

2.1.5. Site Lighting

a) All lighting shall be in character with the established architectural style of the center.
b) All parking lot pole lights require the same fixture head, pole and base throughout the site. Parking lot lighting standard is Kim CC/CCS on 35' pole on reinforced concrete base or approved equal.
c) Boulevard lighting off Washington St. at the center of the site will be Kim ERA fixtures on poles with the pole brackets for seasonal banners. The fixtures shall be set at 25 feet above adjacent grade.
d) Village and building accent lighting along sidewalk frontage will be Architectural Area Lighting Spectra fixtures on poles with pole brackets for seasonal banners. The fixtures shall be set at 15 feet above adjacent grade.
e) Provide 2 foot candle illumination minimum at grade.

2.1.6. Building Lighting

a) All lighting shall be in character with the established architectural style of the center.
b) All decorative accent lighting must be approved by the Landlord.

2.1.7. Truck Docks

a) Service entrances shall be planned to be visually unobtrusive to site entries, building entrances, and public right-of-ways. All truck docks must be fully screened with materials to match the adjacent building. The screen walls shall be a minimum height of 8'-0" above grade.

2.1.8. Trash Enclosures

a) Trash enclosures must be constructed out of a masonry material. Doors must fully screen the interior of the trash enclosure. Trash compactors can be incorporated into Truck Docks. All trash enclosures must be fully screened with materials to match the adjacent building. Trash enclosure walls shall be a minimum height of 8'-0" above grade.

2.2 Major Building Design Standards

2.2.1. Building Tenant Definition

a) Major Tenants are defined as single tenant buildings larger than 80,000 SF. Major Tenant building design must meet the minimum requirements of Section 2.1

2.2.2. Entrances (Refer to Sheets 2.7.5. and 2.7.6)

a) Primary building entrances shall be clearly defined and provide shelter from the summer sun and winter weather. Premium building materials such as stone veneer or glazing system shall be selected to provide greater visual and textural interest at building entries. The height of the stone veneer, glazing system or storefront at the entry must exceed the height of the adjacent wainscot or storefront.
b) Primary entrances shall be easily identifiable to both the vehicular visitor as well as the pedestrian.
c) Architectural articulation shall be evident at primary entrances. Textural and massing changes are required for visual interest as well as reinforcing "human scale." Maximum entry feature height is 45'-0". Maximum parapet height is 35'-0".
d) Scored concrete patterns and textured concrete (non slip) at entrances are encouraged by the Landlord. Sidewalk paving patterns at entries must extend from the storefront to the back of curb and be at least as wide as the glazing system at the entry.

2.2.3. Building Elevations (Refer to Sheets 2.7.4, 2.7.5 and 2.7.5)

a) Break down building massing to a human scale eliminating uninterrupted flat facades by articulating a wall plane with the following architectural elements:
   - Change in plane at change of material
   - Change in color, texture or material
   - Windows
   - Trellises, awnings or canopies
   - Cast stone detailing
   - Raised planters
   - Pilasters or over framed elements

Use the above architectural elements to limit uninterrupted wall planes.

b) Long runs of parapets must vary in height.
c) Side or rear building elevations that face walkways or public streets may include false windows and door openings defined by frames, sills and lintels, or similar modulations of the wall, when actual doors and windows are not feasible because of the nature of the use of the building.
d) Side and rear building elevations of the building shall include materials and design characteristics consistent with those on the front elevation. Use of inferior or lesser quality materials for side or rear-building elevations shall be prohibited except where facades are not visible from the public view.
e) Automotive tire and repair center garage doors shall be screened with landscape berms and plantings.

2.3 Sub-Major (SM) Tenant Building Design Standards

2.3.1. Building Tenant Definition

a) Sub-Major Tenants are defined as tenants or buildings larger than 10,000 SF. and less than 80,000 SF. Sub-Major building design must meet the minimum requirements of Section 2.1.

2.3.2. Entrances (Refer to Sheets 2.7.5. and 2.7.6)

a) Building entrances shall be clearly defined and provide shelter from the summer sun and winter weather. Premium building materials such as stone veneer or glazing system shall be selected to provide greater visual and textural interest at building entries. The height of the stone veneer or glazing system or storefront at the entry must exceed the height of the adjacent walls.
b) Primary entrances shall be easily identifiable to both the vehicular visitor as well as the pedestrian.
c) Architectural articulation shall be evident at primary entrances. Textural and massing changes are required for visual interest as well as reinforcing "human scale." Maximum entry feature height is 42'-0". Maximum parapet height is 40'-0".
d) Primary entrance massing elements must project a minimum of 5'-0" off the adjacent façade of the building. Projecting canopies must be steel framed and project a minimum of 4'-0".
e) Scored concrete patterns and textured concrete (non slip) at entrances are encouraged by the landlord. Sidewalk paving patterns at entries must extend from the storefront to the back of curb and be at least as wide as the glazing system at the entry.
f) Entrances can be incorporated into common plaza areas.
g) Primary building entrance elements must have 25% of their façade veneered with cultured stone. All cultured stone must be capped with cast stone.

2.3.3. Building Elevations (Refer to Sheets 2.7.3, 2.7.4 and 2.7.5)

a) Break down building massing to a human scale eliminating uninterrupted flat facades by articulating a wall plane with the following architectural elements:
   - Change in plane at change in material
   - Change in color, texture or material
   - Windows
   - Trellises, awnings or canopies
   - Cast stone detailing
   - Raised planters
   - Pilasters or over framed elements
b) Parapets must vary in height. Changes in parapet height should not occur at regular intervals.
c) The building foundation wall shall provide a base on all facades of a retail Sub-Major tenant. A minimum 8" cast stone base is required.
d) Side or rear building elevations that face walkways or public streets may include false windows and door openings defined by frames, sills and lintels, or similar articulation of the wall, when actual doors and windows are not feasible because of the nature of the use of the building. All cultured stone must be a minimum of 6" above grade.

e) Side and rear building elevations of the building shall include materials and design characteristics consistent with those on the front elevation. Use of inferior or lesser quality materials for side or rear-building elevations shall be prohibited except at trash enclosures and loading docks where the walls are not visible from to public view.
f) Automotive tire and repair center garage doors shall be screened with landscape berms and plantings.
g) Plane changes must occur at least as often as parapet variations.
h) EIFS shall not be used below 6'-0" above grade.
i) A masonry wainscot must be provided on all facades.
j) Parapet cornices are shall be provided.

2.4 In-Line Shop Building Design Standards

2.4.1. Building Tenant Definition

a) Shop Buildings are defined as common depth In-Line buildings that can accommodate a variety of tenants in varying width storefronts. Shop buildings are typically less than 16,000 SF. Shop building design must meet the minimum requirements of Section 2.1.

2.4.2. Entrances (Refer to Sheets 2.7.5. and 2.7.6)

a) Primary building entrances shall be clearly defined with signage and architectural treatments. The building entrances should reflect the rhythm of the repeating shop spaces. Premium building materials such as stone veneer or glazing system shall be selected to provide greater visual and textural interest at shop entries. Storefront must be interrupted at each structural column line with a pilaster. A steel canopy projecting a minimum of 4'-0" shall provide sun shading above each section of storefront.
b) Entrances shall be easily identifiable to both the vehicular visitor as well as the pedestrian.
c) On in-line buildings, entrances should be distinct from the surrounding field materials through change of materials, color or plane change.
d) Architectural articulation shall be evident at primary entrances. Textural and massing changes are required for visual interest as well as reinforcing “human scale”. Maximum parapet height is 24'-0". The height of architectural tower elements may not exceed 35'-0" above finish floor. Tower elements are permitted in the Village and In-Line shops only.
e) Scored concrete patterns and textured concrete (non slip) at entrances are encouraged by the landlord. Sidewalk paving patterns at entries must extend from the storefront to the back of curb and be at least as wide as the glazing system at the entry.

2.4.3. Building Elevations (Refer to Sheet 2.7.7)

a) Break down building massing to a human scale eliminating uninterrupted flat facades by articulating a wall plane with the following architectural elements:
   - Change in plane at change in material
   - Change in color, texture or material
   - Windows
   - Trellises, awnings or canopies
   - Cast stone detailing
   - Raised planters
   - Pilasters or over framed elements
b) Parapets must vary in height. Changes in parapet height must not occur at regular intervals.
c) Side or rear building elevations that face walkways or public streets may include false windows and door openings defined by frames, sills and lintels, or similar modulations of the wall, when actual doors and windows are not feasible because of the nature of the use of the building.
d) Side and rear building elevations of the building shall include materials and design characteristics consistent with those on the front elevation. Use of inferior or lesser

quality materials for side or rear-building elevations shall be prohibited except where facades are not visible from the public right of way or common open space.

2.5 Village Building Design Standards

2.5.1. Building Tenant Definition

a) Village buildings are situated in the Village area of the project. They are thematically connected with plazas, hardscape, design, and common outdoor seating areas. Village buildings are defined as individual buildings or tenants typically greater than 6,000 SF and less than 8,000 SF. Village building design must meet the minimum requirements of Section 2.1.

2.5.2. Entrances (Refer to Sheets 2.7.5. and 2.7.6)

a) Primary building entrances shall be clearly defined with signage and architectural treatments. The building entrances should reflect the rhythm of the repeating shop spaces. The entrances should step forward and backward similar to the architectural variety of a village center. Premium building materials such as stone veneer or glazing system shall be selected to provide greater visual and textural interest at shop entries.
b) Primary entrances shall be easily identifiable to pedestrian traffic.
c) Architectural articulation shall be evident at primary entrances. Textural and massing changes are required for visual interest as well as reinforcing "human scale." Maximum architectural feature height is 30'-0". Maximum parapet height is 24'-0". The maximum height of the Village Tower is 40'-0".
d) Scored concrete patterns and textured concrete (non slip) at entrances are encouraged by the landlord. Sidewalk paving patterns at entries must extend from the storefront to the back of curb and be at least as wide as the glazing system at the entry.

2.5.3. Building Elevations (Refer to Sheets 2.7.5 and 2.7.6)

a) Break down building massing to a human scale eliminating uninterrupted flat facades by articulating a wall plane with the following architectural elements:
   - Change in plane at change in material
   - Change in color, texture or material
   - Windows
   - Trellises, awnings or canopies
   - Cast stone detailing
   - Raised planters
   - Pilasters or over framed elements

b) Parapets must vary in height. Changes in parapet height must not occur at regular intervals.
c) Side or rear building elevations that face walkways or public streets may include false windows and door openings defined by frames, sills and lintels, or similar modulations of the wall, when actual doors and windows are not feasible because of the nature of the use of the building.
d) Side and rear building elevations of the building shall include materials and design characteristics consistent with those on the front elevation. Use of inferior or lesser quality materials for side or rear-building elevations shall be prohibited except where facades are not visible from the public right of way or common open space.

f) Avoid blank walls at the pedestrian level. Break up building planes adjacent to public walkways with display windows and a variety of entrances, canopies and

materials. Define each tenant, promoting a main street or village character, creating an inviting streetscape for pedestrians.

f) Use building lighting to create a streetscape ambiance at night.

2.6 Pad Site Design Standards

2.6.1. Definition

Pad Sites are defined as individual tenants or buildings typically less than 8,000 SF., with dedicated parking. Free standing Restaurants and Banks are representative tenants of this group.

2.6.2 Standardized Architecture for Restaurants

a) Prototypical building designs shall not be allowed unless the architectural design meets the requirements of this document.

b) Drive-up or drive-through facilities, whether attached or freestanding, shall be tied to the primary building in architectural forms, colors and materials.

c) Ancillary structures, whether attached or freestanding, shall be of a design compatible with the primary building in materials/colors. Such structures shall be constructed of similar materials and designed for durability and easy maintenance.

c) Service areas and utilities shall be fully screened (with walls, fences, landscaping or other forms) and shall be compatible with building materials/colors. Such structures shall be designed for durability and easy maintenance.

d) Primary structures shall match the color palette of the existing buildings

2.6.3. Convenience Stores and Gas Stations

a) For the purpose of encouraging the safe, healthy, attractive and convenient location and development of convenience stores and gas stations, the following supplementary standards apply:

b) Signs for such uses shall conform to the requirements and limitations set forth in the Larkridge Planned Sign Program. Banner, bunting and flags are not permitted.

c) Canopies shall not exceed 24 feet in height. Canopies shall be architecturally integrated with the convenience store building and all other accessory structures on the site through the use of the same or complementary materials, design motif and colors. Lighting fixtures or sources of light that are a part of the underside of the canopy shall be recessed into the underside of the canopy so as not to protrude below the canopy ceiling surface. All light emitted by an under-canopy fixture shall be substantially confined to the ground surface directly beneath the perimeter of the canopy. No lighting, except that permitted by the sign ordinance, shall be permitted on the top or sides of a canopy. The materials and color used on the underside of the canopy shall not be highly reflective, with the intent of minimizing the amount and intensity of light, which reaches beyond the site boundaries. The maximum illumination at grade under the canopy shall not exceed 20 foot candles. Service station canopies and vehicular display light shall not exceed 5.0 foot candles within 1 hour of the close of business.

d) Materials and colors used on both structural and architectural surfaces shall be subdued, earth tone colors, with the intent of promoting a harmonious appearance of the structures and the natural surroundings, as well as with appearance of surrounding development. Brick, stone and other high-quality masonry type elements are strongly encouraged as a major component of the exterior of all structures. Landscape walls shall also compliment the exterior materials and colors used on the principal structure. Bright accent colors, intended to express corporate or business logos, may be used only on a limited basis. These accent color areas shall not be internally illuminated, except for any portions that are permitted by the sign design standards.

g) Landscaping materials and/or screening berms or walls shall be installed along all portions of the street frontage necessary, in order to screen from view the gasoline service islands and pumps and any other product dispensing areas from abutting residentially zoned properties. No wooden fences or wall shall be used for these purposes. These requirements shall be additional to and made part of all other landscape requirements stipulated by the performance standards, as they apply to such sites.

h) Heating, air conditioning, refrigeration, ventilation or other mechanical equipment located on the exterior of any structure shall be screened from view on all sides, which are visible as viewed from the abutting street frontage or adjacent residential properties.

i) The minimum distance between parallel fuel pump islands shall be twenty-five (25) feet.

j) The minimum distance from the outside edge of the fuel pump island and a required drive lane shall be no less than twelve feet. The minimum distance from the end of a fuel pump island and a required drive lane shall be no less than fifteen feet.

k) No sign shall be allowed on the premise, which is visible beyond the boundaries, or the premise that advertises, identifies, or directs the attention of the public to any specific food(s) item products, not including beverages, which are offered for sale and/or consumption on the premise as part of the accessory sales.

l) Food(s), food items, or food products, offered for sale on the premise shall be limited to those types of food that have been previously prepared off the premise and only requires, as part of the purchase of the product, removal of wrappers or packaging, heating, re-heating, chilling, or assembly by the consumer in order to prepare it for human consumption.

m) Primary structures shall match the color palette of the existing buildings.

2.7 Drawing Appendix

2.7.1 Architectural Character – Sub-Major Buildings
2.7.2. Architectural Character – Village
2.7.3 Sub-Major - Elevations
2.7.4 Sub-Major- Elevations
2.7.5 Sub-Major - Entry
2.7.6. Section at Canopy
2.7.7 Awning Details
2.7.8 Bracket and Cornice Details
2.7.9 Color Elevations
2.7.10 Site Lighting Product Literature
Materials Boards

2.8 Severability

If any section, subsection, sentence, phrase or clause of these Architectural Design Standards is for any reason held to be invalid or unenforceable, such invalidity or unenforceability shall not affect the validity or enforceability of the remaining portions of these Sign Design Standards.

2.9 Mandatory Effect

These Architectural Design Standards are mandatory and shall apply to all the real property described on the following sheet, Exhibit A (the "Property"). The foregoing not withstanding, deviations may be allowed if approved by the City of Thornton and by the undersigned Declarant in its sole discretion. The Declarant may assign its right of approval hereunder to the owner of any parcel within the property.

Exhibit A - Legal Description

That portion of the following described legal description, to be known as: Lots 1 through 6, LARKRIDGE SUBDIVISION FILING NO. 1, County of Adams, State of Colorado:

A parcel of land situated in part of the East one-half of Section 3 and the Northwest one-quarter of Section 2, Township 1 South, Range 68 West of the 6th Principal Meridian, County of Adams, State of Colorado, more particularly described as follows:

Commence at the Northeast corner of said Section 3; thence South 00°21'00" West, along the East line of the Northeast one-quarter of said Section 3, a distance of 88.01 feet to the True Point of Beginning;

1) thence North 86°52'38" East a distance of 30.05 feet to the beginning of a non tangent 1357.50 foot radius curve whose center bears South 05°54'45" West;
2) thence Southeasterly, along said curve and the Southwesterly line of State Highway "7", through a central angle of 40°07'52" an arc distance of 950.82 feet to the point of reverse curvature with a non-tangent 1357.50 foot radius curve whose center bears North 49°00'41" East;
3) thence Southeasterly, along said curve and the Southwesterly line of State Highway "7", through a central angle of 2°24'21" an arc distance of 57.00 feet;
4) thence non-tangent to the last described curve South 37°33'30" East, along the Southwesterly line of State Highway "7", a distance of 292.00 feet;
5) thence South 35°29'35" East, along the Southwesterly line of State Highway "7", a distance of 2041.83 feet to a point on the South line of the Northwest one quarter of said Section 2, said point being North 89°55'20" West a distance of 365.64 feet from the center of said Section 2;
6) thence North 89°55'20" West, along the South line of the Northwest one-quarter of said Section 2, a distance of 2283.46 feet to the West one-quarter corner of said Section 2;
7) thence North 89°39'04" West, along the South line of the Northeast one-quarter of said Section 3, a distance of 75.00 feet;
8) thence South 00°21'00" West a distance of 327.12 feet;
9) thence North 90°00'00" West a distance of 1647.46 feet to the Easterly line of Interstate "25" as monumented;
10) thence North 22°25'51" East, along sad Easterly line, a distance of 363.85 feet to the South line of the Northeast one-quarter of said Section 3;
11) thence North 89°39'04" West, along said South line, a distance of 2.18 feet to the Easterly line of Interstate "25" as monumented;
12) thence North 22°30'40" East, along said Easterly line, a distance of 1216.19 feet;
13) thence North 32°43'55" East, along said Easterly line, a distance of 445.00 feet;
14) thence North 31°38'40" East, along said Easterly line, a distance of 118.30 feet;
15) thence North 37°09'25" East, along said Easterly line, a distance of 215.80 feet;
16) thence North 23°37'55" East, along said Easterly line, a distance of 462.70 feet;
17) thence North 38°01'24" East a distance of 141.93 feet;
18) thence North 86°52'38" East a distance of 431.18 feet to the Point of Beginning;

County of Adams,
State of Colorado.

Robert L. Meadows Jr., PLS 34977
Prepared on behalf of Matrix Design Group, Inc.
1601 Blake Street, Suite 200
Denver, CO 80202
303.572.0200

ARCHITECTURAL CHARACTER - IN LINE SUB-MAJOR TENANTS

mcg architecture

T: 720.529.8768 F: 720.529.8774
5300 DTC Parkway, Suite 450, Greenwood Village, CO 80111-3023

CLIENT:

Jordon Perlmutter & Co.
1601 BLAKE STREET
DENVER, COLORADO 808202
PHONE: 303.595.9919
FAX: 303.595.3435

ARCHITECTURAL DESIGN
STANDARDS - APPENDIX

LARKRIDGE
THORNTON, COLORADO

LARKRIDGE

No.	Description	Date

Project No.:

Date: 06.04.04

Scale: N.T.S.

Sheet Title:
IN-LINE AND
SUB MAJOR BUILDINGS
CHARACTER
PERSPECTIVE

Sheet #:
2.7.1

XREF:
FILE PATH:

ARCHITECTURAL CHARACTER - VILLAGE BUILDINGS

mcg architecture

T: 720.529.8768 F: 720.529.8774
5300 DTC Parkway, Suite 450, Greenwood Village, CO 80111-3023

CLIENT:

Jordon Perlmutter & Co.
1601 BLAKE STREET
DENVER, COLORADO 808202
PHONE: 303.595.9919
FAX: 303.595.3435

ARCHITECTURAL DESIGN STANDARDS - APPENDIX

LARKRIDGE
THORNTON, COLORADO

LARKRIDGE

No.	Description	Date

Project No.:

Date: 06.04.04

Scale: N.T.S.

Sheet Title:

VILLAGE BUILDINGS CHARACTER PERSPECTIVE

Sheet #:

2.7.2

XREF:
FILE PATH:

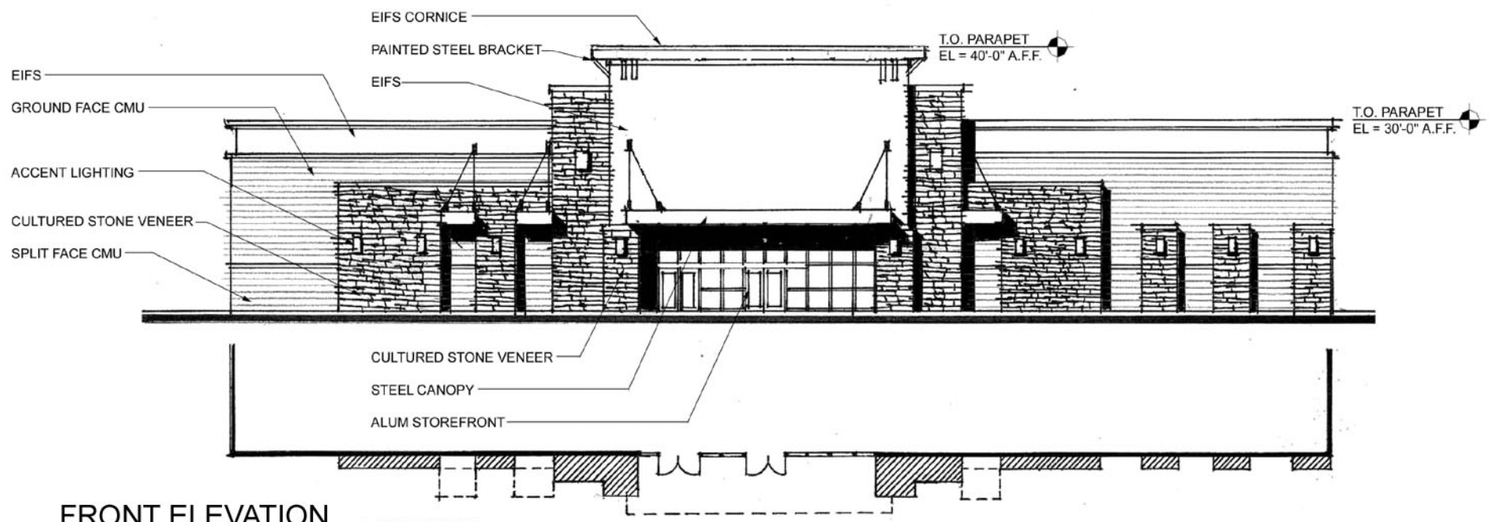

FRONT ELEVATION

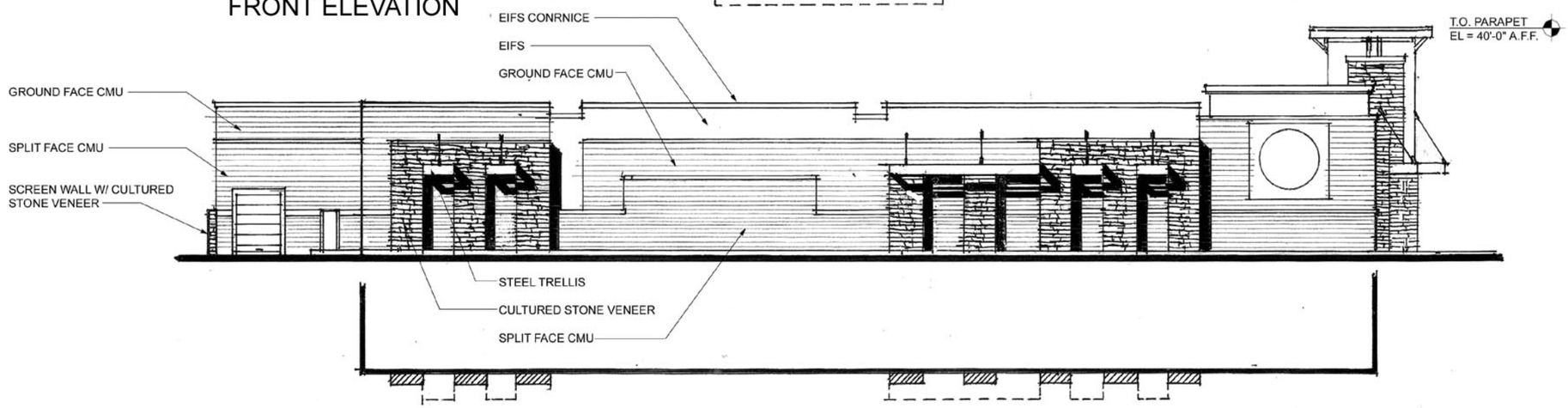

SIDE ELEVATION

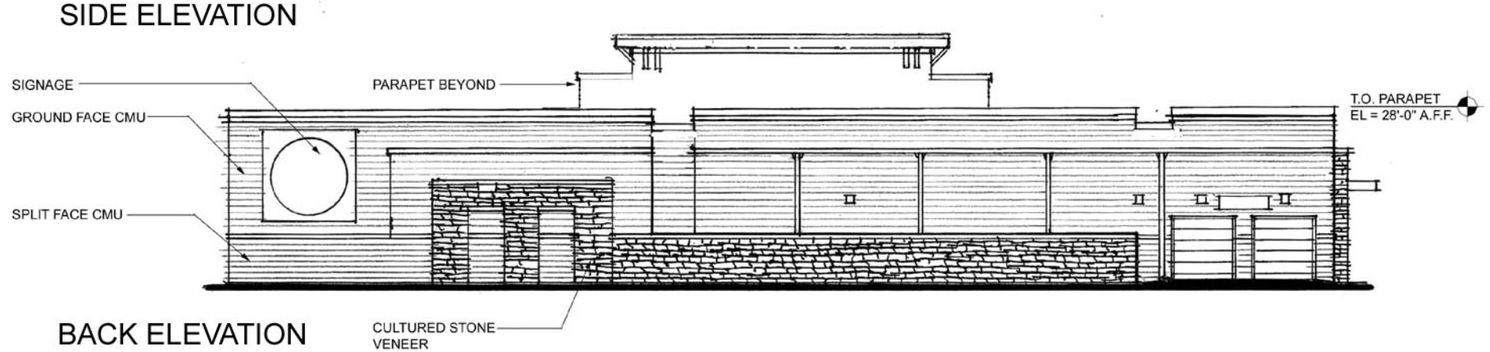

BACK ELEVATION

mcg architecture
T: 720.529.8768 F: 720.529.8774
5300 DTC Parkway, Suite 450, Greenwood Village, CO 80111-3023
CLIENT:
Jordon Perlmutter & Co.
1601 BLAKE STREET
DENVER, COLORADO 808202
PHONE: 303.595.9919
FAX: 303.595.3435

ARCHITECTURAL DESIGN
STANDARDS - APPENDIX
LARKRIDGE
THORNTON, COLORADO

LARKRIDGE

No.	Description	Date

Project No.:

Date: 06.04.04

Scale: N.T.S.

Sheet Title:

SUB-MAJOR
ELEVATIONS

Sheet #:

2.7.3

XREF:
FILE PATH:

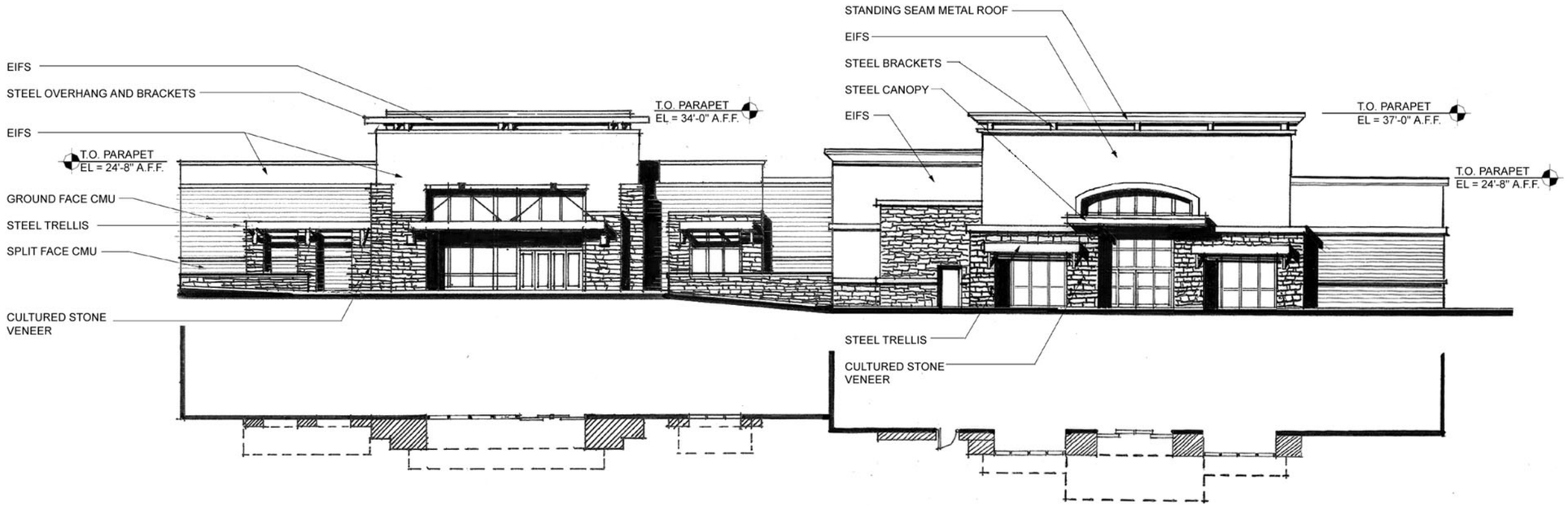

FRONT ELEVATION

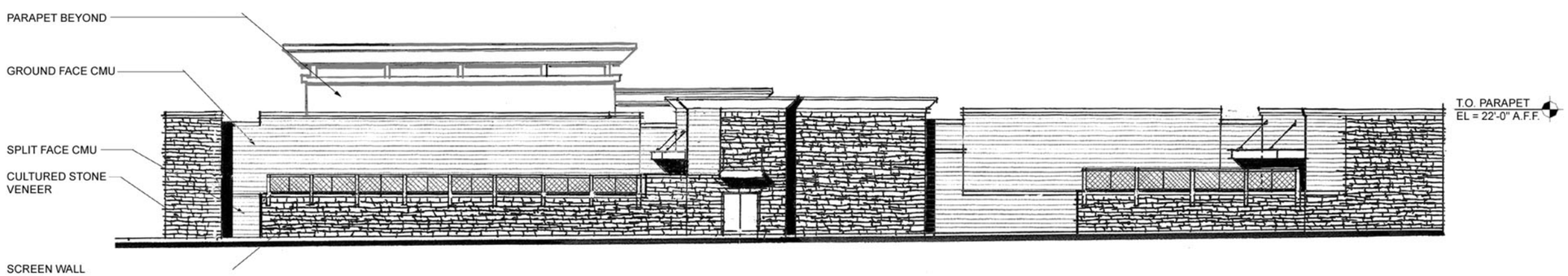

BACK ELEVATION

mcg architecture
T: 720.529.8768 F: 720.529.8774
5300 DTC Parkway, Suite 450, Greenwood Village, CO 80111-3023

CLIENT:

Jordon Perlmutter & Co.
1601 BLAKE STREET
DENVER, COLORADO 808202
PHONE: 303.595.9919
FAX: 303.595.3435

ARCHITECTURAL DESIGN
STANDARDS - APPENDIX

LARKRIDGE
THORNTON, COLORADO

LARKRIDGE

No.	Description	Date

Project No.:

Date: 06.04.04

Scale: N.T.S

Sheet Title:

SUB-MAJOR
ELEVATIONS

Sheet #:

2.7.4

XREF:
FILE PATH:

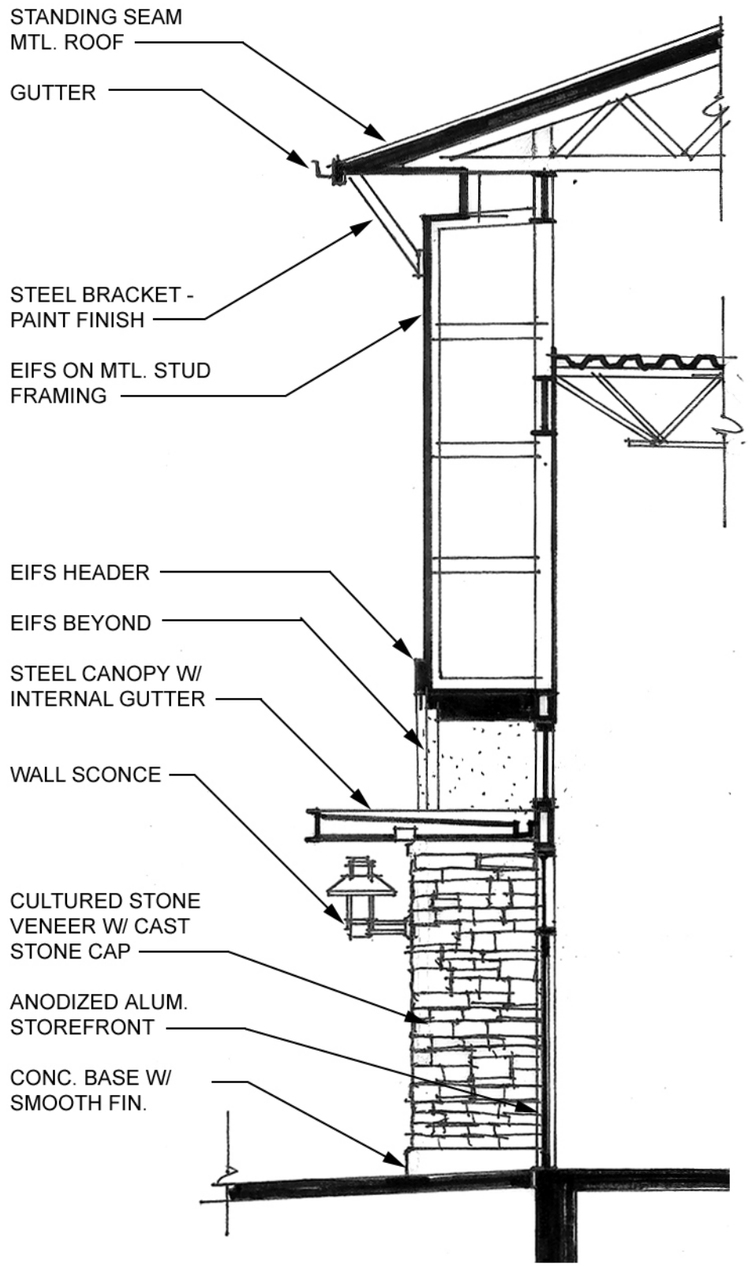

SECTION @ ENTRY (2.7.5.3)

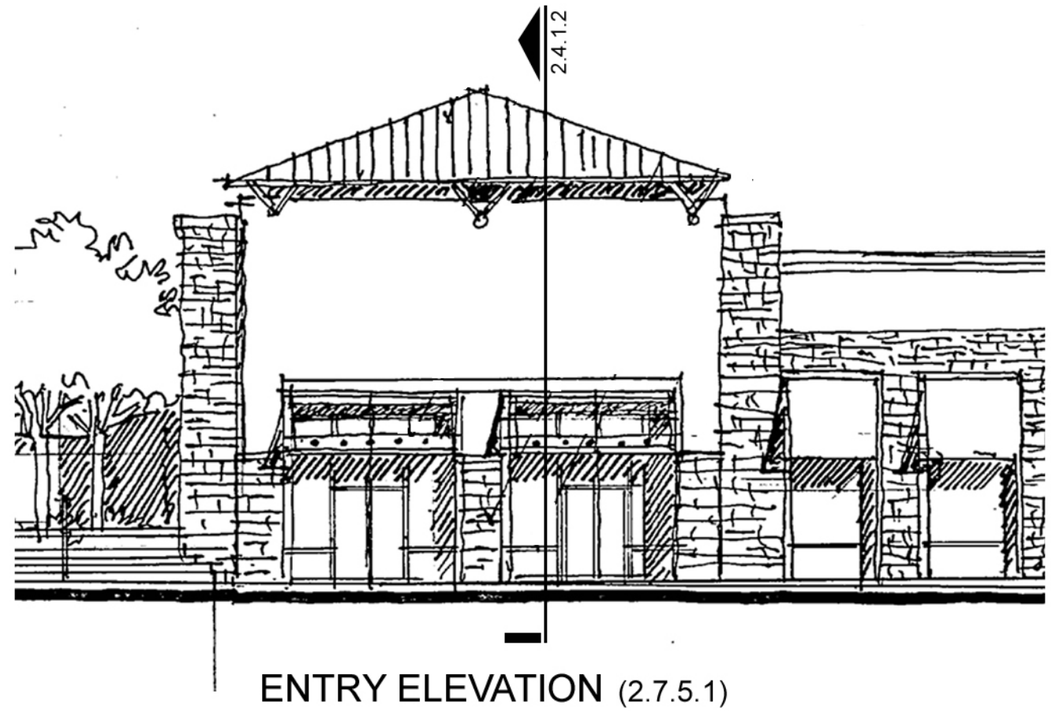

ENTRY ELEVATION (2.7.5.1)

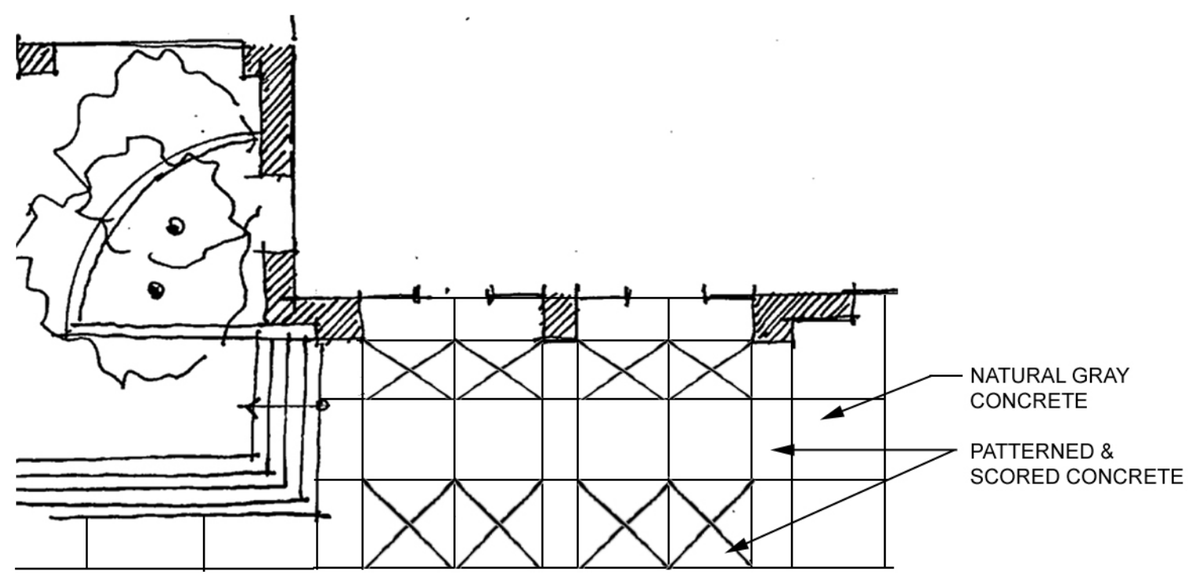

HARDSCAPE PLAN (2.7.5.2)

mcg architecture
T: 720.529.8768 F: 720.529.8774
5300 DTC Parkway, Suite 450, Greenwood Village, CO 80111-3023
CLIENT
Jordon Perlmutter & Co.
1601 BLAKE STREET
DENVER, COLORADO 808202
PHONE: 303.595.9919
FAX: 303.595.3435

ARCHITECTURAL DESIGN STANDARDS - APPENDIX

LARKRIDGE
THORNTON, COLORADO

LARKRIDGE

No.	Description	Date

Project No.:

Date: 06.04.04

Scale: N.T.S.

Sheet Title:

SUB-MAJOR ENTRY

Sheet #:

2.7.5

XREF:
FILE PATH:

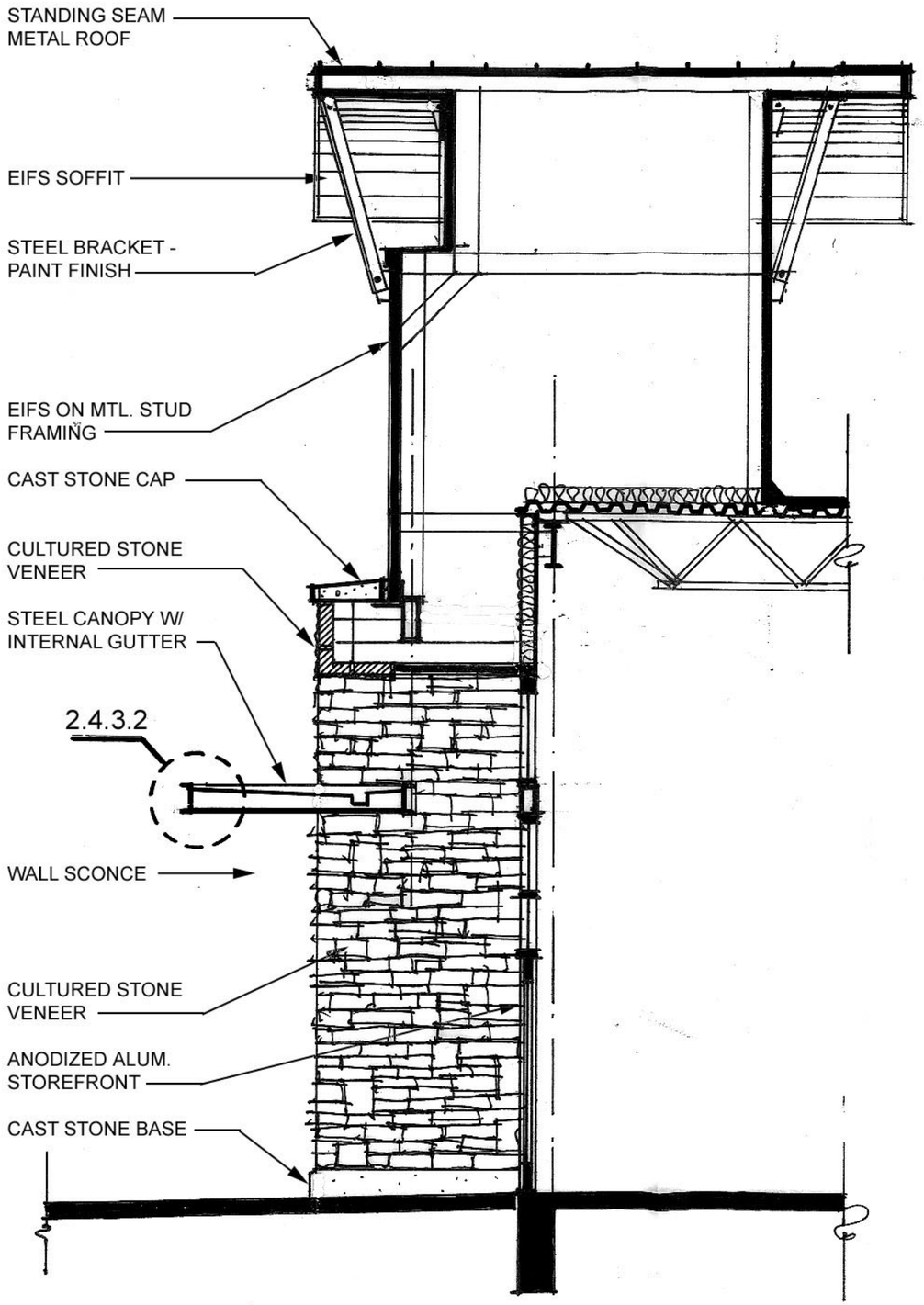

SECTION @ ENTRY (2.7.6.3)

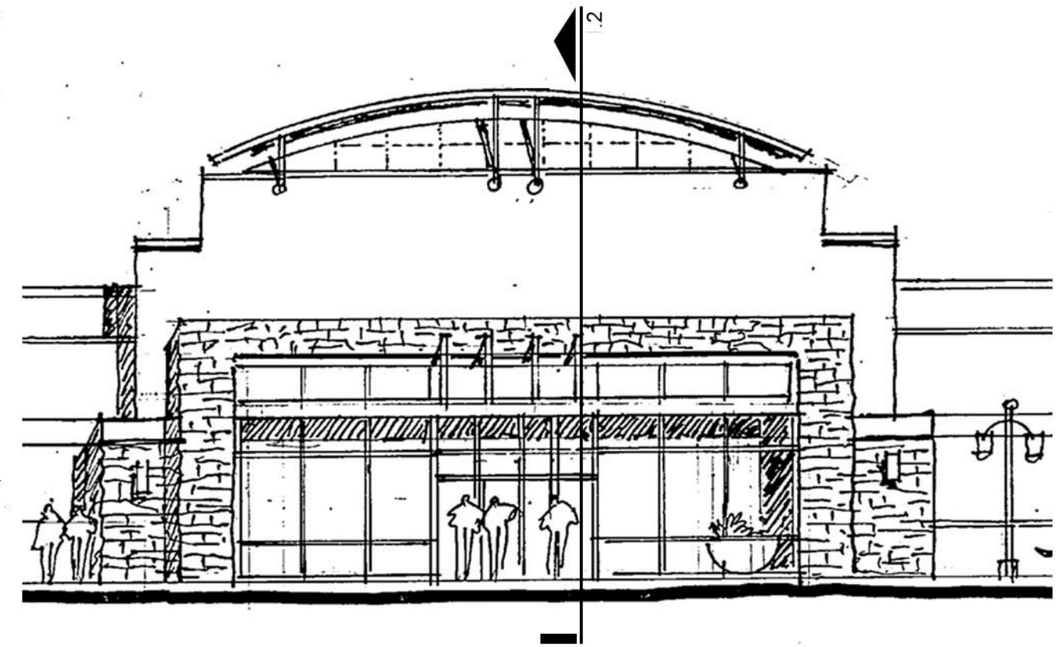

ENTRY ELEVATION (2.7.6.1)

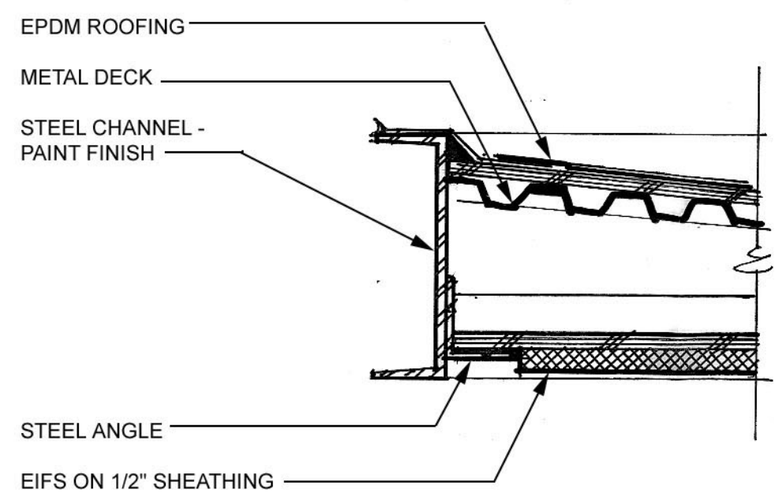

CANOPY DETAIL (2.7.6.2)

mcg architecture
T 720.529.8768 F 720.529.8774
5300 DTC Parkway, Suite 450, Greenwood Village, CO 80111-3023
CLIENT
Jordon Perlmutter & Co.
1601 BLAKE STREET
DENVER, COLORADO 808202
PHONE: 303.595.9919
FAX: 303.595.3435

ARCHITECTURAL DESIGN STANDARDS - APPENDIX

LARKRIDGE
THORNTON, COLORADO

LARKRIDGE

No.	Description	Date

Project No.:

Date: 06.04.04

Scale: N.T.S.

Sheet Title:

SUB MAJORS SECTION AT CANOPY

Sheet #:

2.7.6

XREF:
FILE PATH:

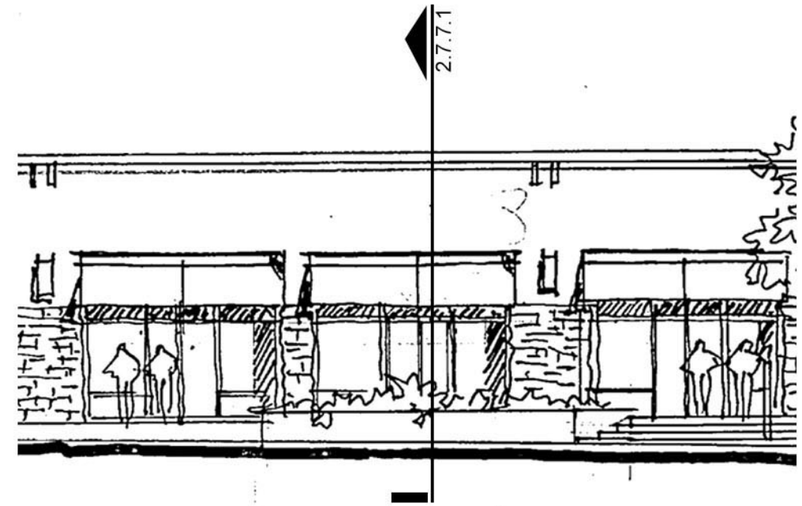

SHOP ELEVATION (2.7.7.1)

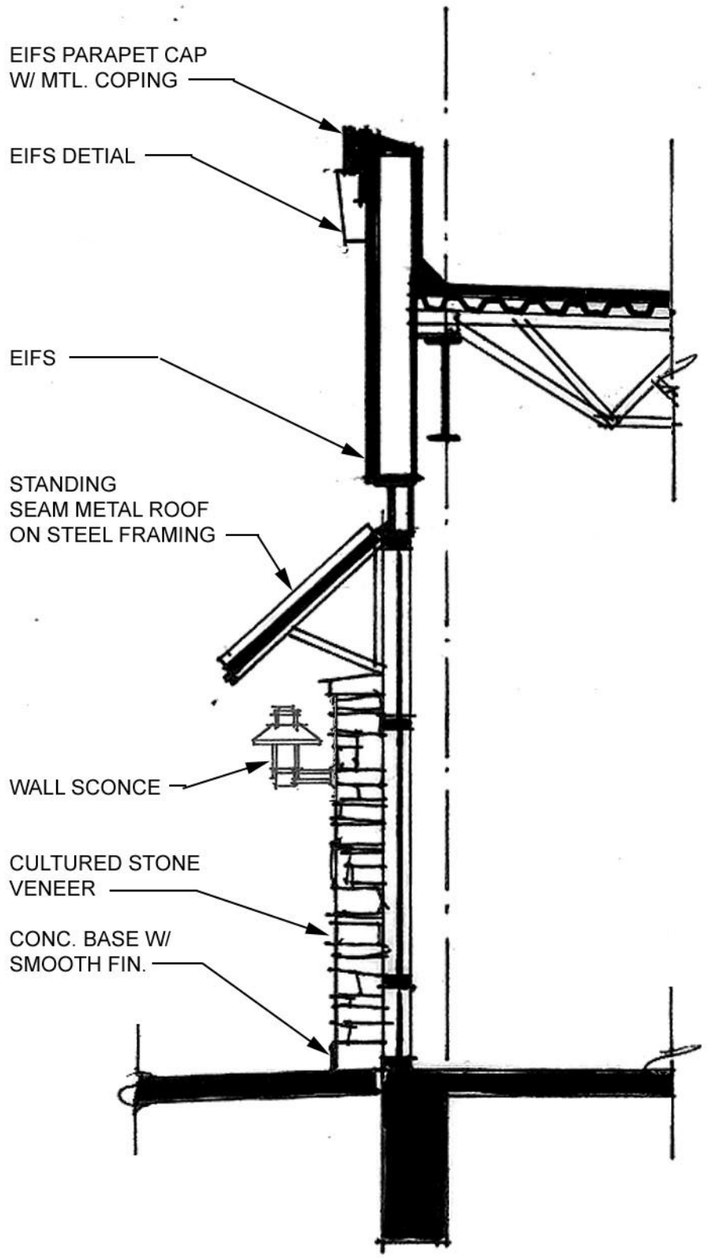

SECTION @ AWNING (2.7.7.3)

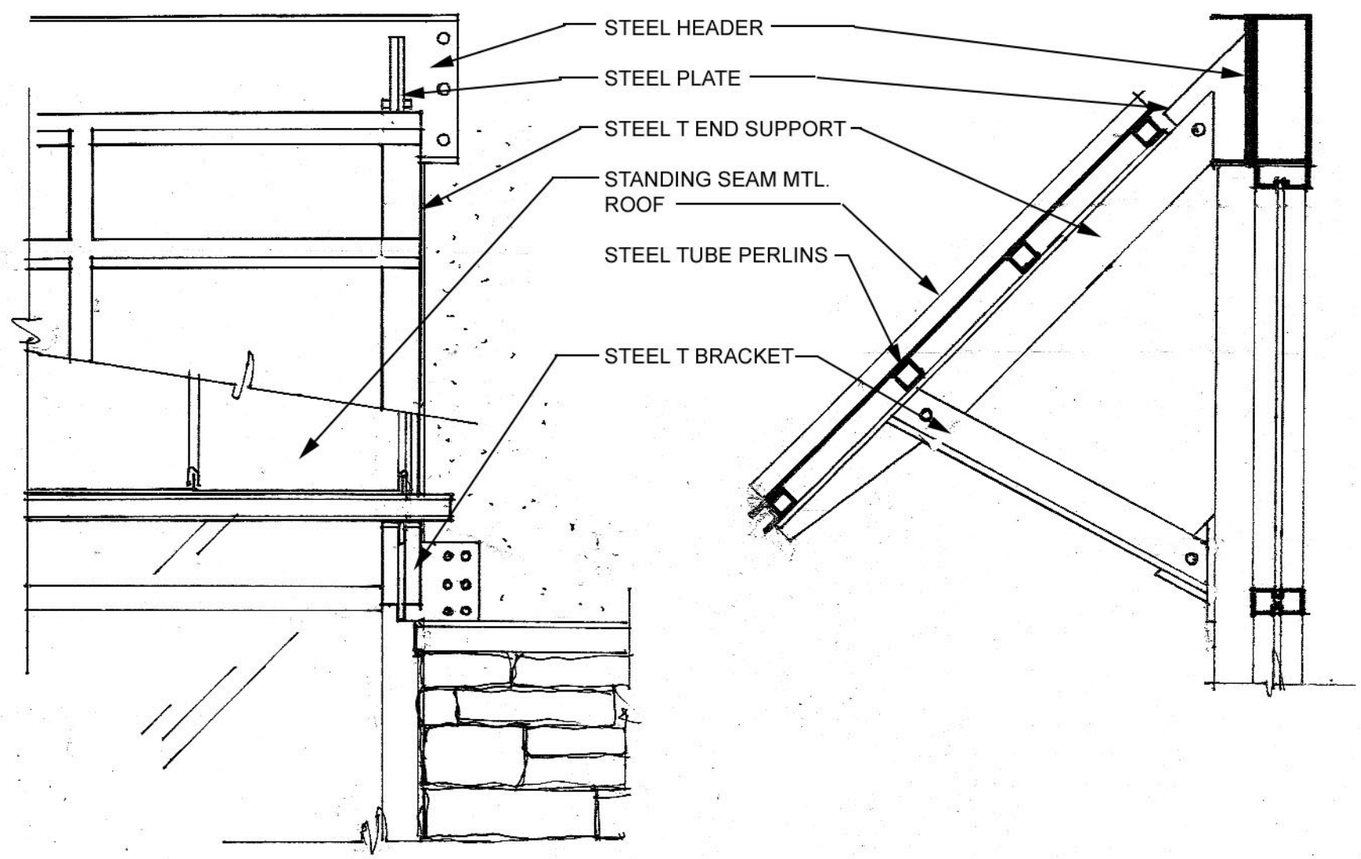

AWNING DETAIL (2.7.7.2)

mcg architecture
T 720.529.8768 F 720.529.8774
5300 DTC Parkway, Suite 450, Greenwood Village, CO 80111-3023

CLIENT

Jordon Perlmutter & Co.
1601 BLAKE STREET
DENVER, COLORADO 808202
PHONE: 303.595.9919
FAX: 303.595.3435

ARCHITECTURAL DESIGN
STANDARDS - APPENDIX
LARKRIDGE
THORNTON, COLORADO

LARKRIDGE

No.	Description	Date

Project No.:

Date: 06.04.04

Scale: N.T.S.

Sheet Title:

IN-LINE/VILLAGE
AWNING
DETAILS

Sheet #:

2.7.7

XREF:
FILE PATH:

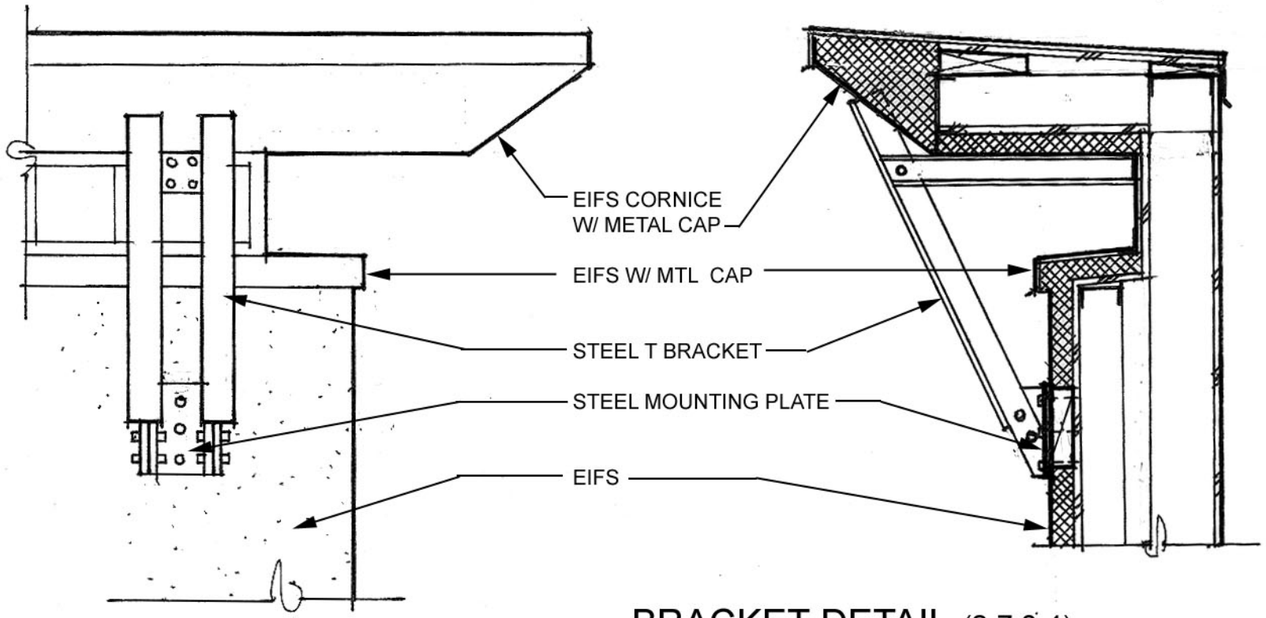

BRACKET DETAIL (2.7.8.4)

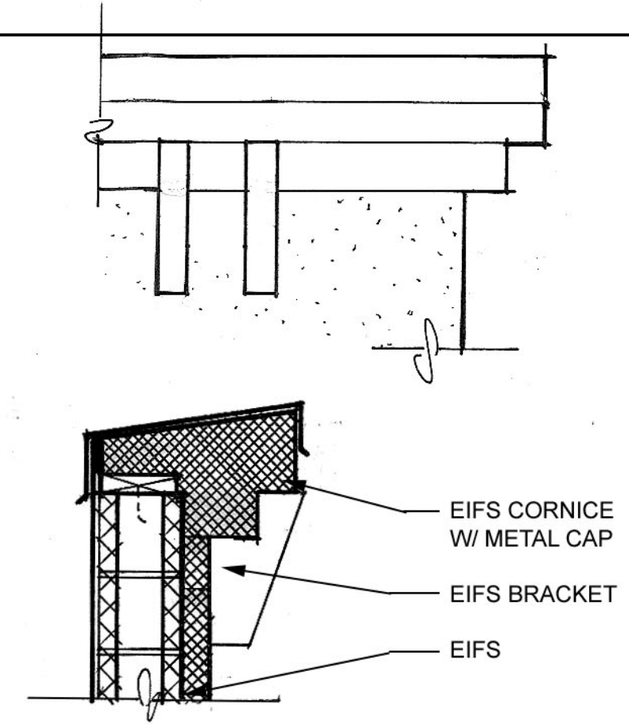

CORNICE DETAIL (2.7.8.1)

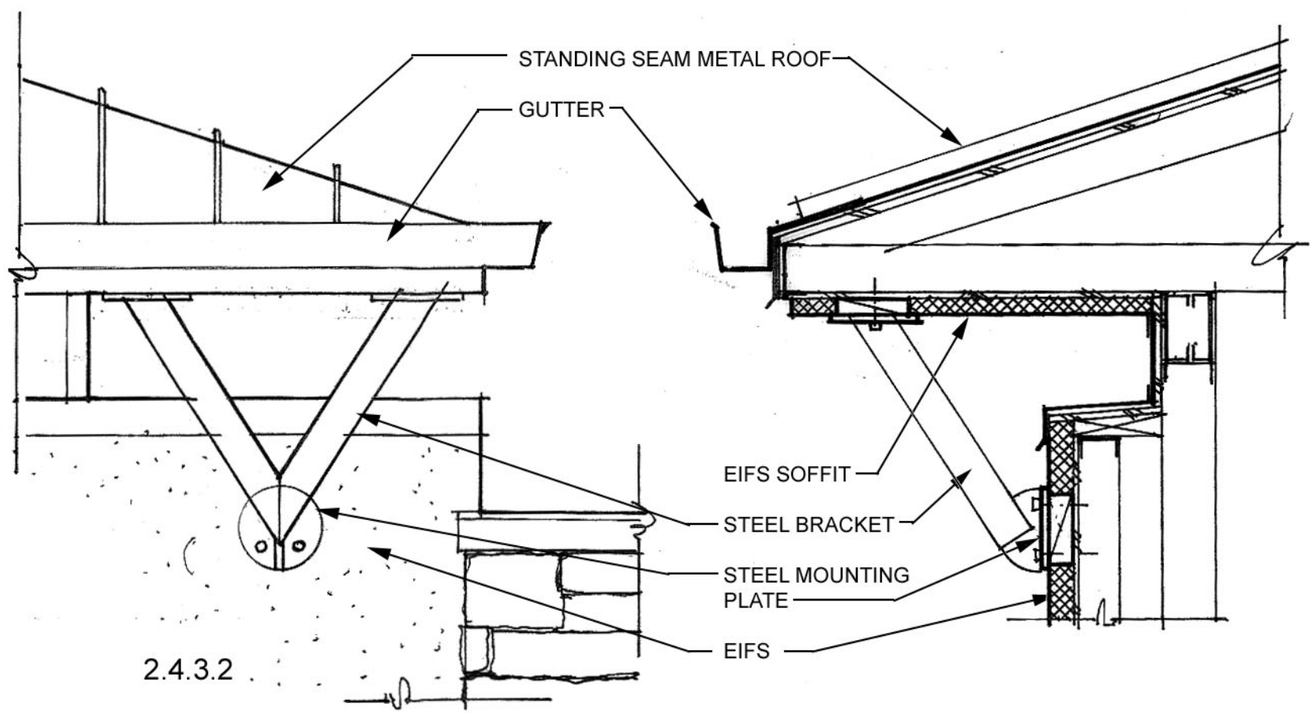

BRACKET DETAIL (2.7.8.3)

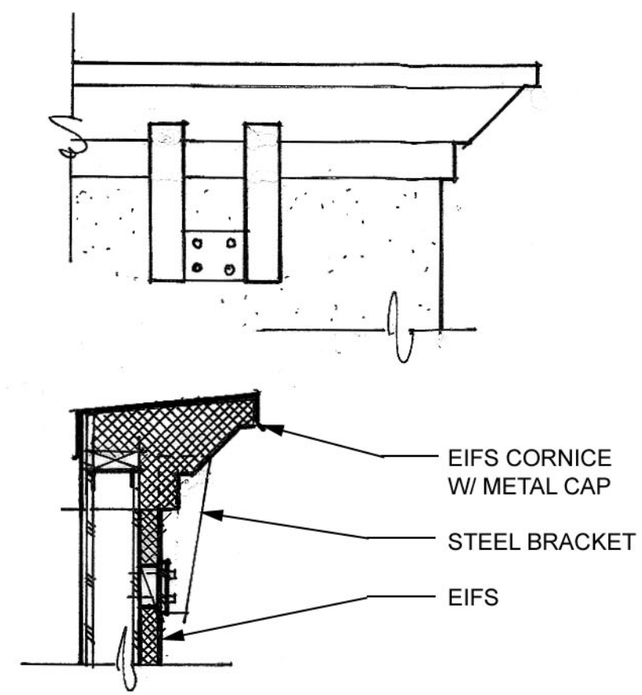

CORNICE DETAIL (2.7.8.2)

mcg architecture
T 720.529.8768 F 720.529.8774
5300 DTC Parkway, Suite 450, Greenwood Village, CO 80111-3023
CLIENT
Jordon Perlmutter & Co.
1601 BLAKE STREET
DENVER, COLORADO 808202
PHONE: 303.595.9919
FAX: 303.595.3435

ARCHITECTURAL DESIGN
STANDARDS - APPENDIX

LARKRIDGE
THORNTON, COLORADO

No.	Description	Date

Project No.:

Date: 06.04.04

Scale: N.T.S.

Sheet Title:

BRACKET &
CORNICE DETAILS

Sheet #:

2.7.8

XREF:
FILE PATH:

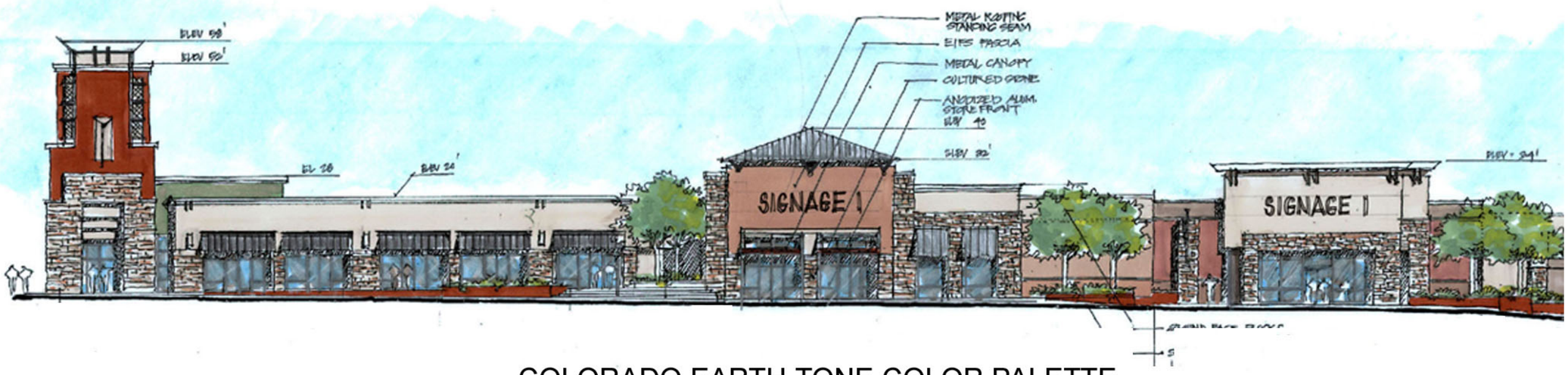

COLORADO EARTH TONE COLOR PALETTE

mcg architecture
T 720.529.8768 F 720.529.8774
5300 DTC Parkway, Suite 450, Greenwood Village, CO 80111-3023

CLIENT:

Jordon Perlmutter & Co.
1601 BLAKE STREET
DENVER, COLORADO 808202
PHONE: 303.595.9919
FAX: 303.595.3435

ARCHITECTURAL DESIGN STANDARDS - APPENDIX
LARKRIDGE
THORNTON, COLORADO

LARKRIDGE

No.	Description	Date

Project No.:

Date: 06.04.04

Scale: N.T.S.

Sheet Title:

COLOR ELEVATIONS

Sheet #: 2.7.9

XREF:
FILE PATH:

SEE SITE LIGHTING PRODUCT LITERATURE
ON THE FOLLOWING PAGES

mcg architecture
T 720.529.8768 F 720.529.8774
5300 DTC Parkway, Suite 450, Greenwood Village, CO 80111-3023

CLIENT:

Jordon Perlmutter & Co.
1601 BLAKE STREET
DENVER, COLORADO 808202
PHONE: 303.595.9919
FAX: 303.595.3435

ARCHITECTURAL DESIGN
STANDARDS - APPENDIX

LARKRIDGE
THORNTON, COLORADO

LARKRIDGE

No.	Description	Date

Project No.:

Date: 06.04.04

Scale: N.T.S.

Sheet Title:

SITE LIGHTING
FIXTURES

Sheet #:

2.7.10

XREF:
FILE PATH:

ROADWAY FIXTURES

INTERNATIONAL DESIGN LUMINAIRE

70 - 400 WATT

KIM LIGHTING

Style and Performance

Aesthetics without Compromise

Approach

Unlike most Kim project innovations that have a singular design theme, Era™ is unique. We wanted to develop a luminaire that was equally at home in either a traditional or contemporary setting; an international style fixture capable of establishing a visual unity with many architectural themes. To accomplish this, Era combines basic design elements of both traditional and contemporary luminaires, skillfully orchestrated into a cohesive product design with appealing proportions and elegant detailing.

Era incorporates Kim's most up-to-date optical systems, with four horizontal lamp reflectors and two vertical lamp reflectors. Sacrificing performance to include style of this caliber is no longer required.

Performance

In every respect, Era is optically equal to any Kim Site / Roadway luminaire. The reflectors used are the same as those available in the very popular Archetype®, Entablature®, and Matrix™ series. Including fully rotatable orientation and sealed optical chambers, Era offers an alternative to rectilinear designs without sacrificing illumination performance.

Robust Components

Castings and extrusions are used to produce precise and durable detailing. Tight fitment and rigid construction insure clean component attachment and tight sealing against intrusion of contaminants.

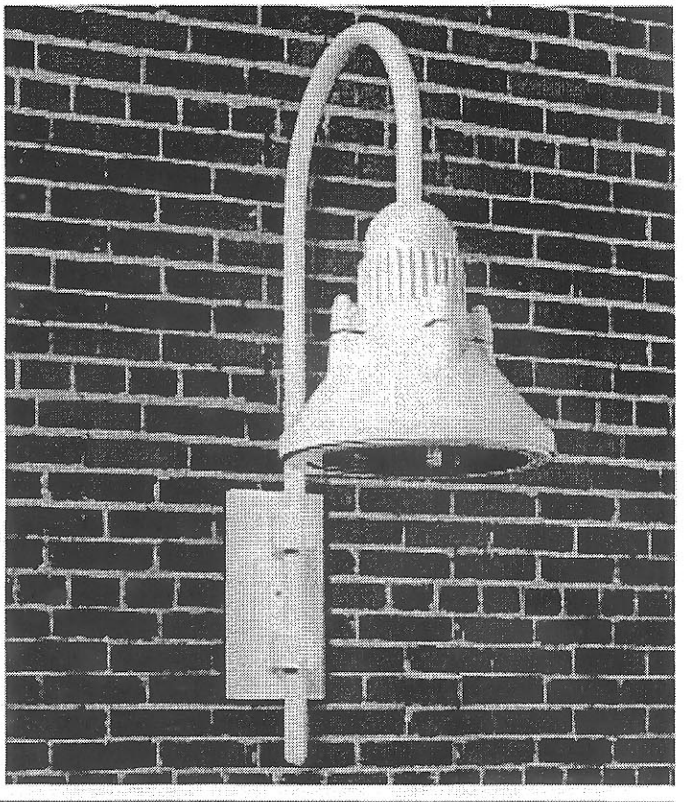

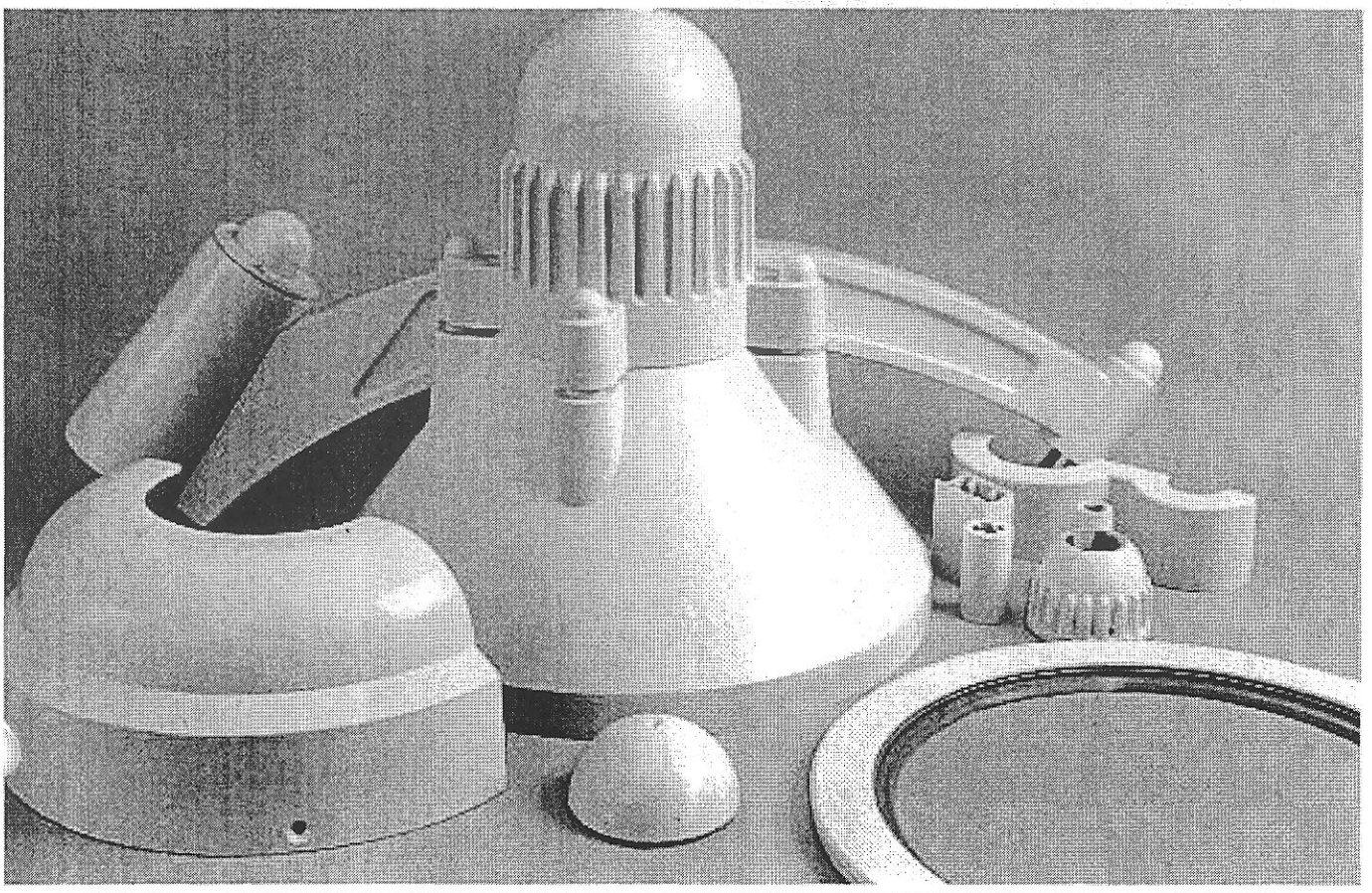

Integrated Design

Complimentary Detailing

Integration

Era design approaches all detailing as integral pieces of the whole. From the use of its clean bell shape for the Optical Housing and exposed cooling surfaces on the Ballast Housing, to the detailing of the mounting arms and poles, Era is complete.

Combining proven mechanical features with a highly styled package without sacrificing either performance or aesthetic design is a difficult task. Era answers this challenge, with flexibility to satisfy a wide range of architectural tastes.

The luminaire, mounting arms, and poles were developed with shared detailing and complimentary mating components. This approach produces a complete design that is robust in style and mechanical integrity.

1W
Wall Mount

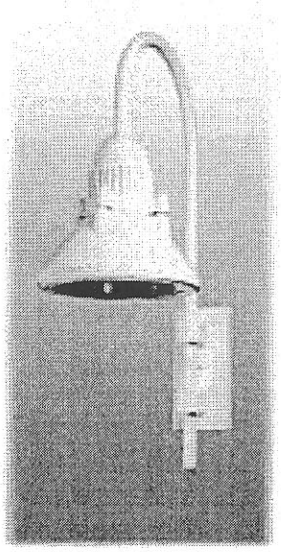

CSS / CSL
Single Top Crook

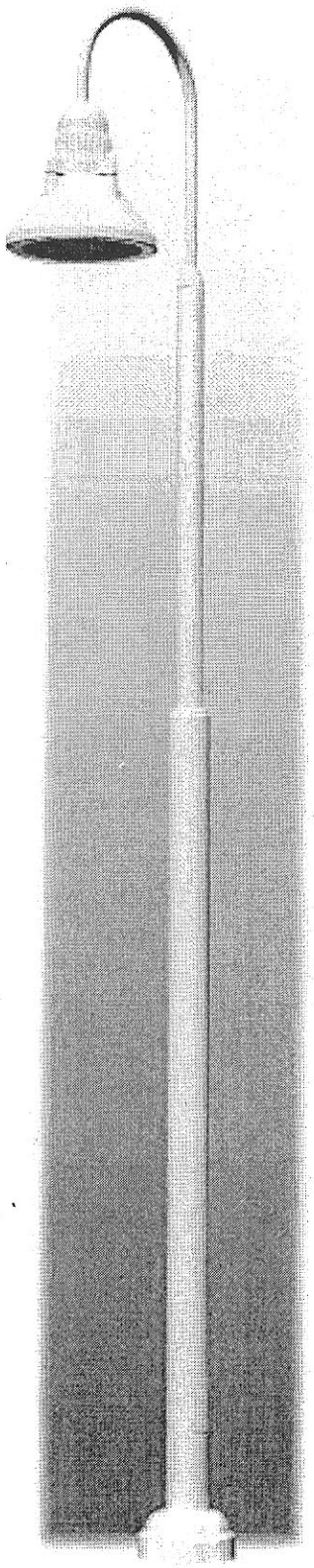

CAS / CAL
Side Mount Crook

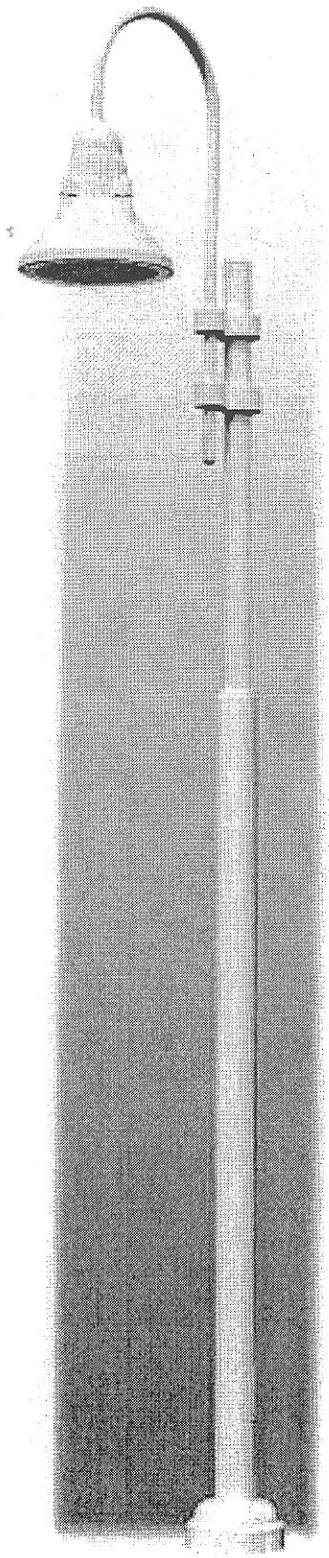

SAS / SAL
Swept Arm Mount

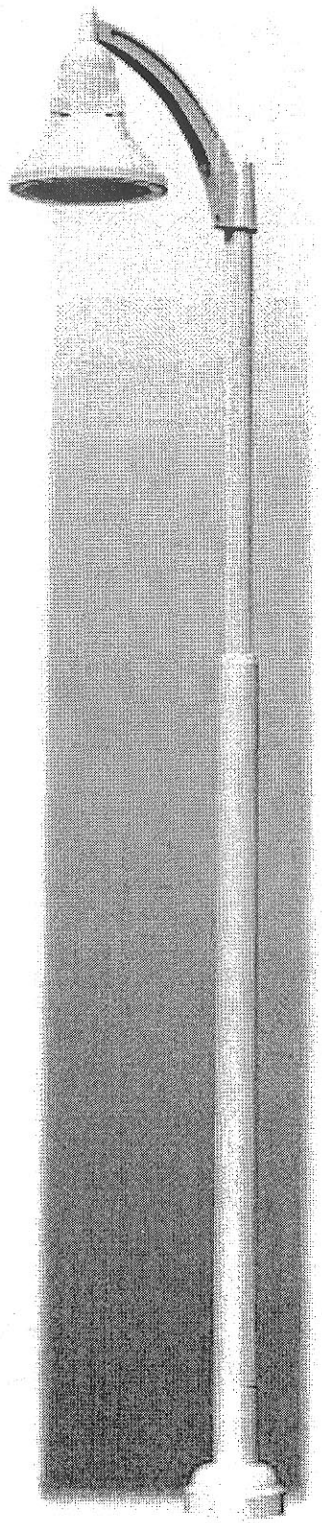

Design Features

Precision and Durability

Die-Cast Aluminum Components

The Era housing and door frame are die-cast aluminum for precision and repeatability. The two piece housing is reinforced and sealed with a continuous O-ring silicone gasket.

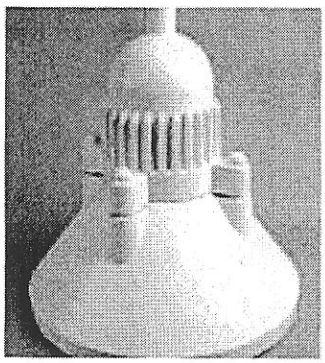

The precision of die casting produces clean detailing and elegant proportions. Ballast housing ribs aid component cooling.

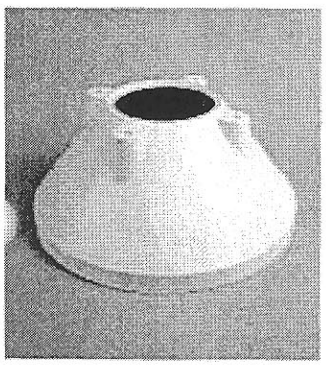

Die-cast lower body produces durable, smooth detail. Rigid component insures trouble free seal to ballast housing.

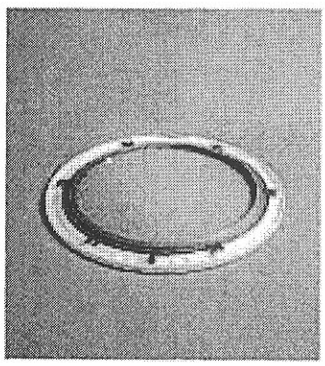

The door frame is extra rigid for dependable sealing of the optical chamber through uniform gasket pressure.

Extruded Aluminum Arms

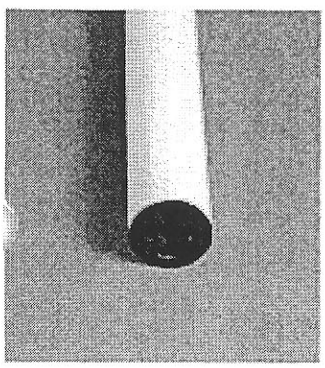

The crook arms are formed from an aluminum extrusion specifically designed to dampen oscillations due to wind. The structural integrity of this extrusion also resists the "sagging" look that develops from vibration and weight, commonly found in other luminaires of this type.

Durable Powder Coat Finish

Kim's state-of-the-art powder coat paint system is engineered to provide the highest quality finish with absolute paint adhesion under weather extremes. The Super TGIC thermoset polyester powder coat finish is applied over a chromate pretreatment. This finish system exceeds the A.S.T.M. 1000 hour salt spray test, enduring over 2500 hours without failure.

Eight Stage Finish

1. Power wash and degrease.
2. Detergent tank bath.
3. Clear water rinse bath.
4. Chromate bath. The best known pretreatment of aluminum for corrosion resistance and paint adhesion.
5. Clear water rinse bath.
6. Dry off oven.
7. Powder coating, 2.5 mil nominal thickness.
8. Bake for 20 minutes at 410°F.

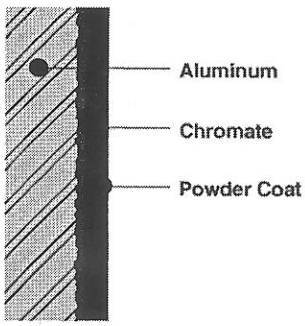

Standard Super TGIC Colors

BL-P Black
DB-P Dark Bronze
LG-P Light Gray
PS-P Platinum Silver
WH-P White

Strong Universal Mount

Era luminaires incorporate a strong double-bolt mount, universal to every arm configuration.

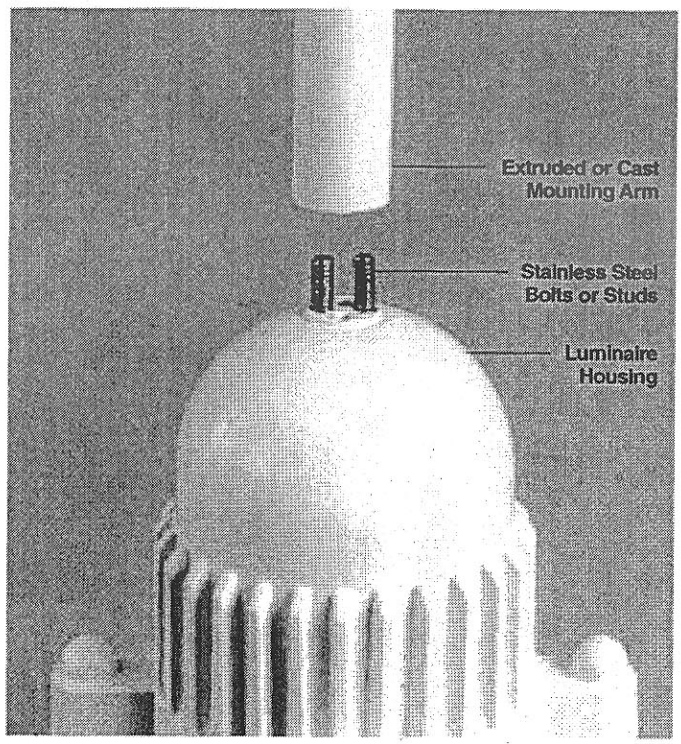

Sealed Optical System

The optical compartment is completely sealed from outside and inside including wire entries to the socket. The tempered clear glass lens is sealed by molded silicone gaskets at the optical compartment. By eliminating the intrusion of moisture, dust, and insects, the efficiency of the optical system is maintained. This assures maximum light output between standard maintenance intervals.

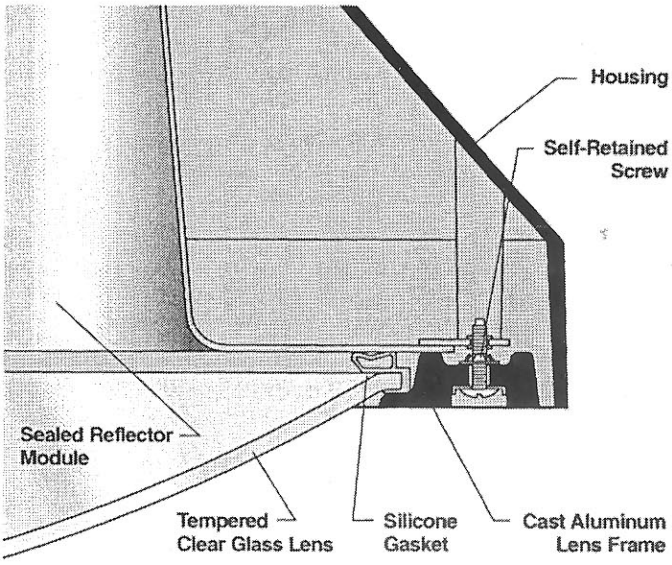

Ventilated Ballast Compartment

The ballast housing of the Era luminaire draws ventilation air from around the sealed optical assembly to maintain the lowest possible operating temperature.

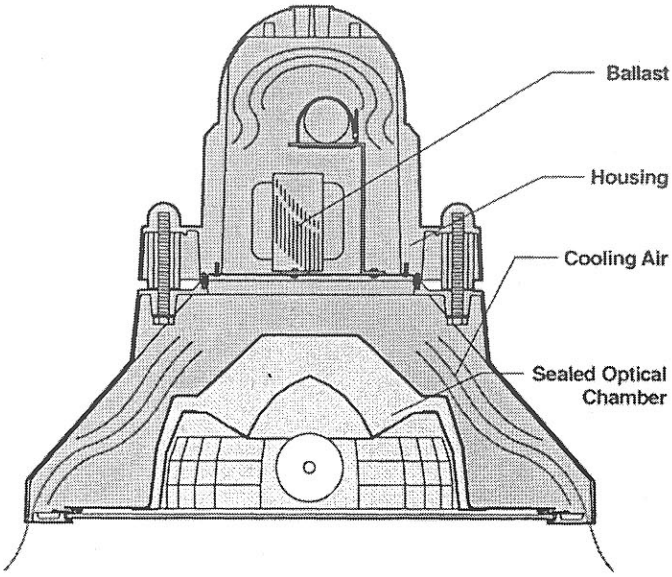

Optional Glow Ring

The optional glow ring receives illumination from a sealed window in the optical system. This produces just the right amount of accent light, while maintaining the integrity of the sealed optical chamber.

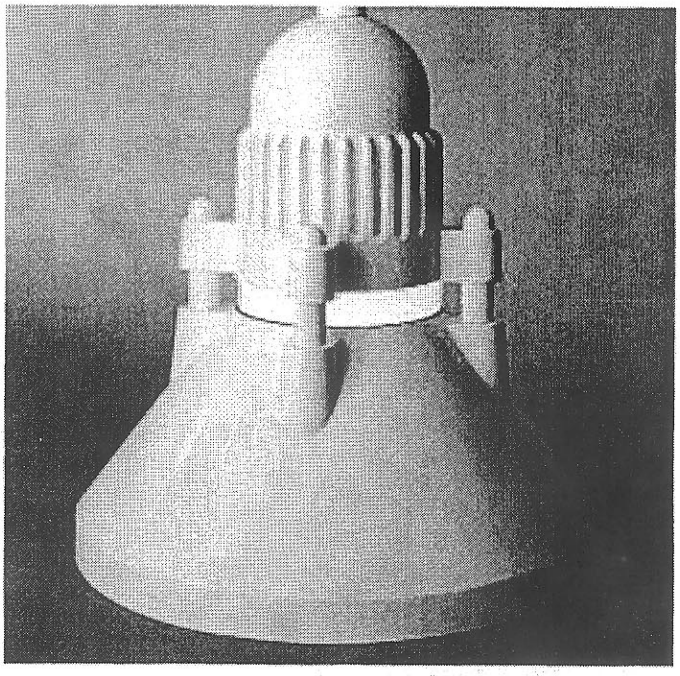

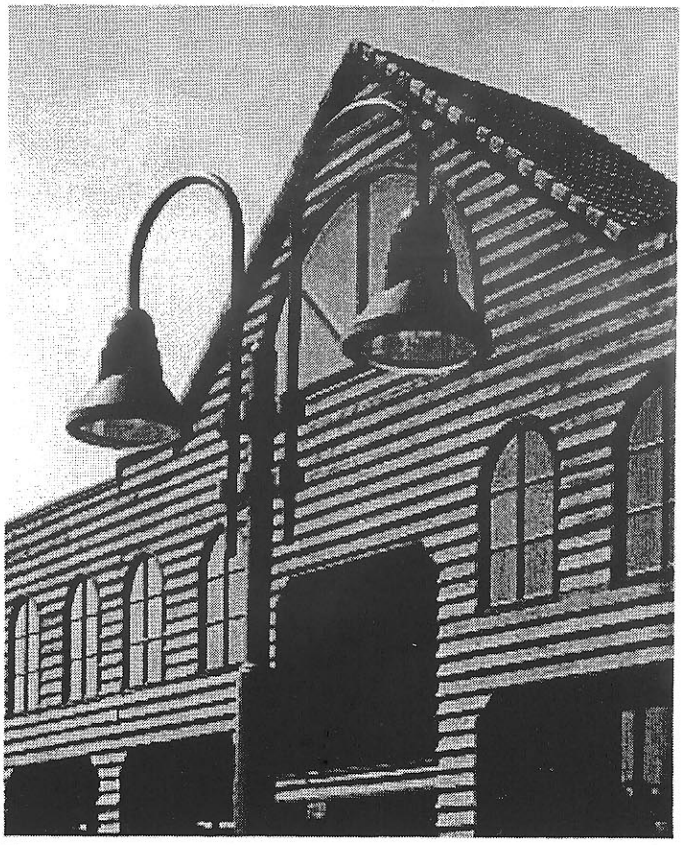

Optical System Features

Horizontal or Vertical Lamp

See the **Kim Site / Roadway Optical Systems Catalog** for complete details and explanation of optical system features.

Horizontal Lamp

Available in **Type II, Type III, Type IV,** and **Type V Square** distributions. This flat lens system provides **maximum cutoff control** and very good uniformity.

Sealed optics and performance reflector technology allow this horizontal lamp optical system to maximize lamp output. An optional houseside shield is available for Types II, III, and IV distributions.

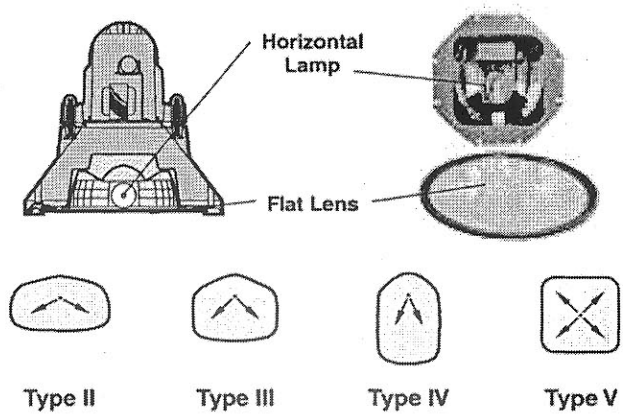

Optional Convex Lens

An optional convex lens offers increased lens presence, a subtle improvement in uniformity and increased effectiveness of houseside shielding.

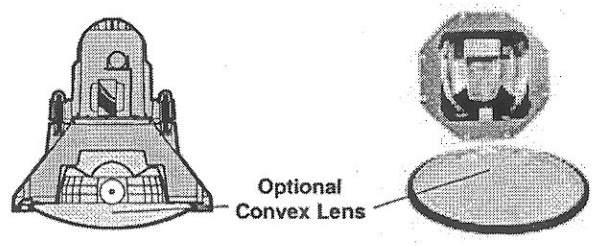

Vertical Lamp

Available in **Asymmetric** and **Symmetric** distributions in wide range. Provides vertical lamp performance in a compact luminaire profile with excellent uniformity.

The reflector utilizes Kim's split beam reflector technology, optimizing lamp output and life (see below). An optional houseside shield is available for the Asymmetric distribution.

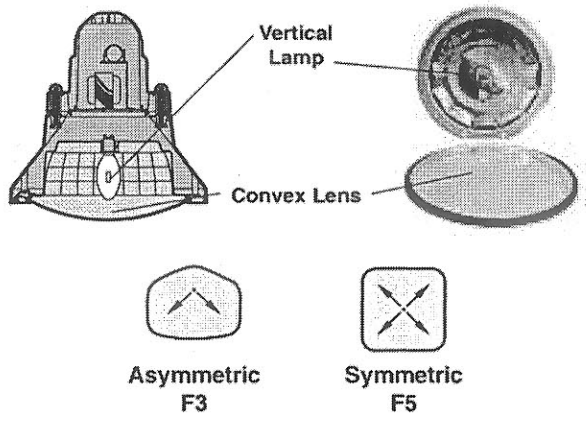

Split Beam Reflector Geometry

Wide-beam vertical lamp reflectors will redirect light back into the lamp unless properly designed. Kim reflectors are precision engineered to avoid this by using split-beam reflector geometry.

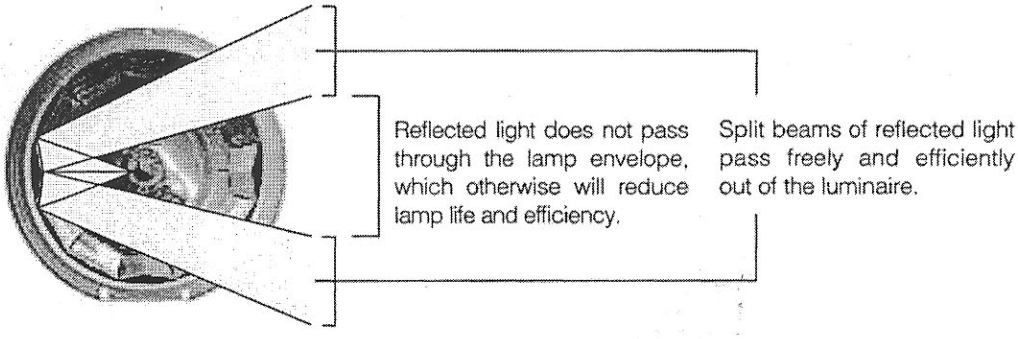

Rotatable Optics

All asymmetric reflectors are field rotatable in 90° increments. This allows design flexibility in producing very high illumination levels for special applications or for maintaining a consistent fixture orientation throughout the site. To facilitate field rotation, each reflector is labeled to show the orientation of the light pattern.

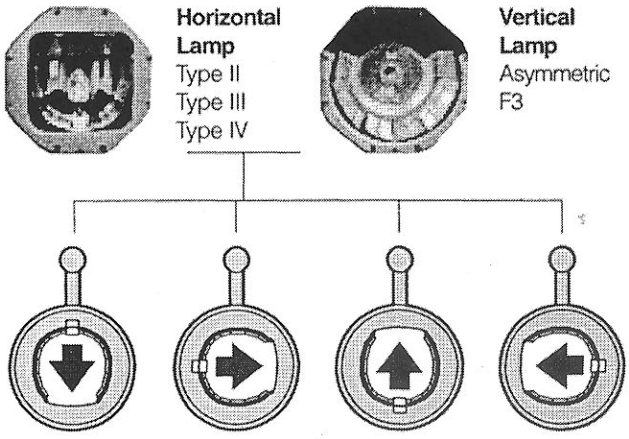

Rotatable reflectors offer a degree of refinement in fixture orientation when the architecture and site demand perfection.

When the twin-mounted luminaires are used for site lighting using Types II, III or IV distributions, the combined effect from the twin mount is a rectangular light pattern.

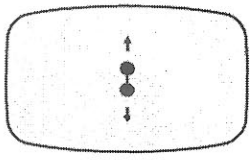

To change the orientation of the rectangular pattern, you normally change the orientation of the twin mount. An alternative to this is shown at right, where the fixture orientation remains constant and the internal reflectors rotate to change the orientation of the rectangular light pattern. This can maintain identical fixture orientations throughout the site.

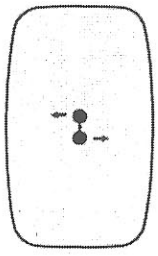

For applications demanding high light levels, such as tennis courts and automobile dealerships, reflectors can be rotated in parallel to double the light levels. Houseside shields can be added to the fixtures for reducing spill light into unwanted areas behind the luminaires.

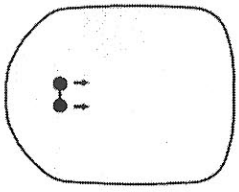

Cutoff Control

Luminaires with good cutoff characteristics produce less light pollution and distribute a greater portion of their output into usable lighting zones. This is not only more efficient, it produces a more conscientious and environmentally friendly lighting design.

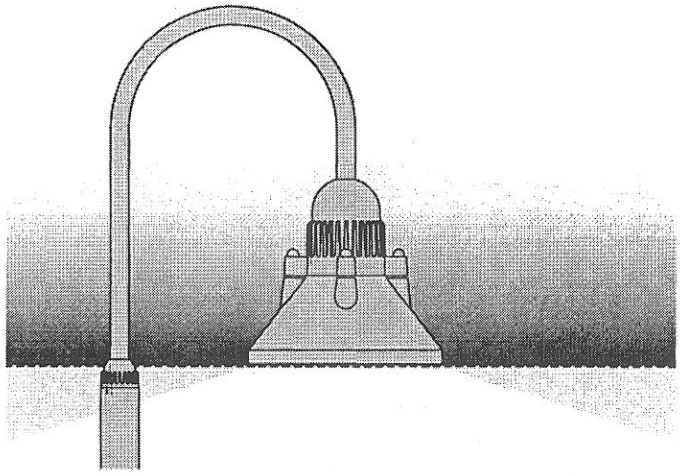

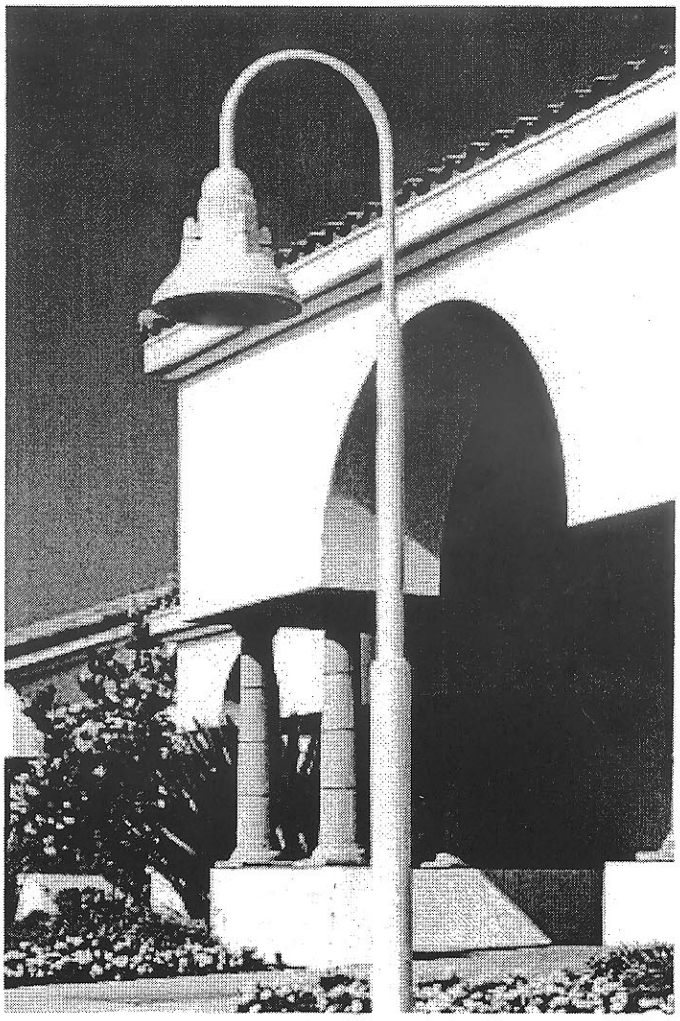

Mounting Configurations

Crook Arms

CSS / CSL
Single Top Crook

Extruded Crook Arm

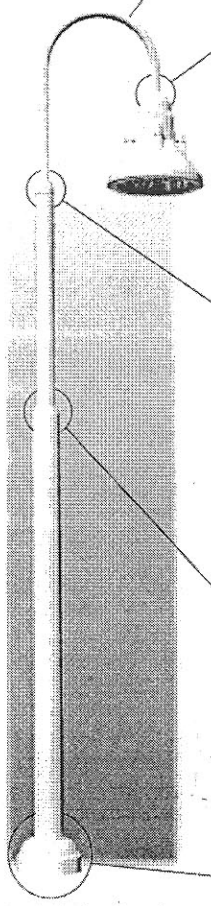

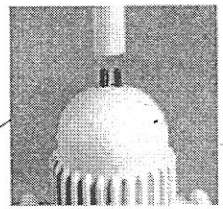

The luminaire head is bolted to the crook arm with two large stainless steel bolts.

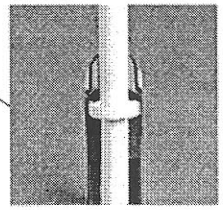

The crook arm slip fits and is bolted into the pole top.

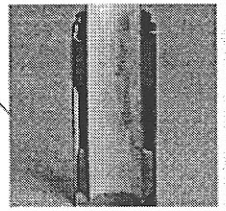

The pole step transition is reinforced and fully welded.

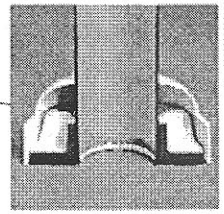

The pole base is double welded and includes a full cast cover.

Available Configurations

1A

CAS / CAL
Side Mount Crook

Extruded Crook Arm

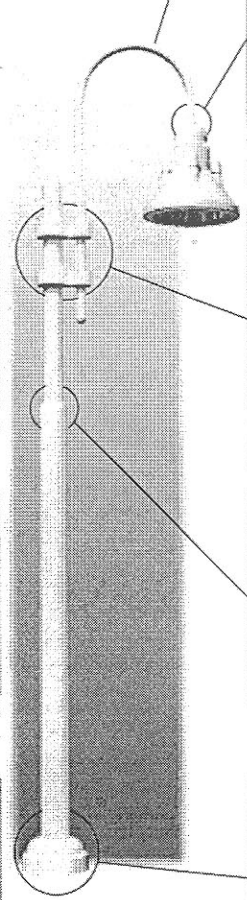

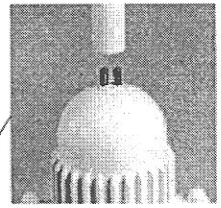

The luminaire head is bolted to the crook arm with two large stainless steel bolts.

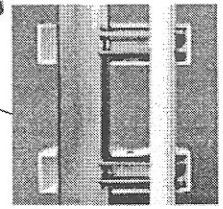

The crook arm is securely bolted to the pole under decorative covers.

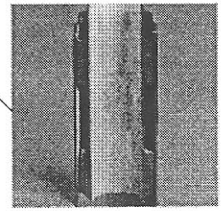

The pole step transition is reinforced and fully welded.

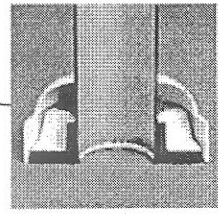

The pole base is double welded and includes a full cast cover.

Available Configurations

1W 1A 2B

3Y 4C

Swept Arm

SAS / SAL
Swept Arm Mount

Heavy Cast Arm

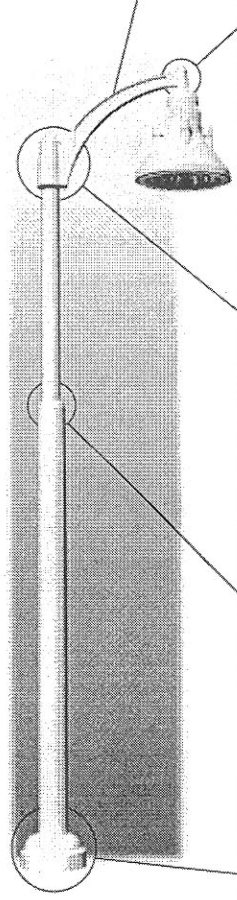

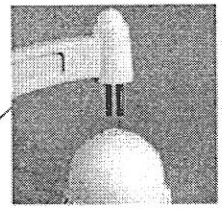

The luminaire head is bolted to the crook arm with two large stainless steel studs.

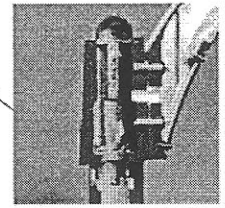

The cast arm is attached to a cast pole-top fitter with large stainless steel bolts.

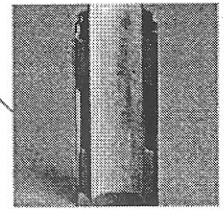

The pole step transition is reinforced and fully welded.

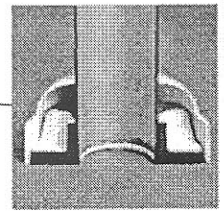

The pole base is double welded and includes a full cast cover.

Available Configurations

1A 2B

3Y 4C

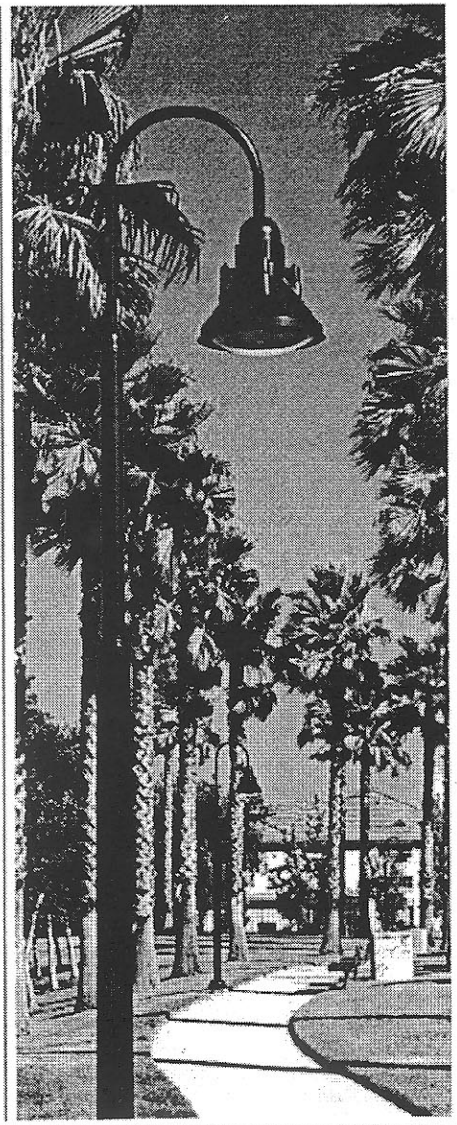

Luminaire Ordering Information

Era™ Series

RA17
70 to 175 Watt
RA25
150 to 400 Watt

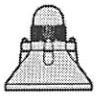

Ordering Example:
For Standard Fixture and Pole

Mounting	Fixture	Electrical Module	Finish	Options	Pole
1A	RA173	175MH277	LG-P	A-33	CSS14-534188A / LG-P
1	2	3	4	5-11	12

See pages 18 - 21. Omit for 1W Wall Mount.

1 Mounting:

Plan View:

Cat. No.:	1A	2B	3Y	4C	1W
EPA 17":	0.8	1.6	2.4	2.8	n/a
EPA 25":	1.5	3.0	4.5	5.2	n/a

NOTE: 1A, 2B, 3Y and **4C** mounting arms are part of the Pole Assembly (pages **18 - 23**) or Slipfitter Mount. **1W** Wall Mount includes arm, available for **RA17** Luminaire only.

2 Reflector:

See the Kim Site/Roadway Optical Systems Catalog for detailed information on reflector design and application.

Horizontal Lamp

Flat Lens

Light Distribution:	Type II	Type III	Type IV Forward Throw	Type V Square
Cat. No.: 17"	RA172	RA173	RA174	RA175
25"	RA252	RA253	RA254	RA255

Vertical Lamp

Convex Lens

Light Distribution:	Asymmetric	Symmetric Square
Cat. No.: 17"	RA17F3	RA17F5
25"	RA25F3	RA25F5

3 Electrical Module:

HPS = High Pressure Sodium
MH = Metal Halide
PMH = Pulse Start Metal Halide

Lamp Watts	Lamp Type	Line Volts
400	HPS	277

RA17 17" Housing

70HPS120	100MH120
70HPS208	100MH208
70HPS240	100MH240
70HPS277	100MH277
70HPS347	100MH347
100HPS120	150MH120
100HPS208	150MH208
100HPS240	150MH240
100HPS277	150MH277
100HPS347	150MH347
150HPS120	175MH120
150HPS208	175MH208
150HPS240	175MH240
150HPS277	175MH277
150HPS347	175MH347

RA25 25" Housing

150HPS120	175MH120	175PMH120*
150HPS208	175MH208	175PMH208*
150HPS240	175MH240	175PMH240*
150HPS277	175MH277	175PMH277*
150HPS347	175MH347	
150HPS480	175MH480	
250HPS120	250MH120	250PMH120
250HPS208	250MH208	250PMH208
250HPS240	250MH240	250PMH240
250HPS277	250MH277	250PMH277
250HPS347	250MH347	
250HPS480	250MH480	
400HPS120	400MH120	400PMH120
400HPS208	400MH208	400PMH208
400HPS240	400MH240	400PMH240
400HPS277	400MH277	400PMH277
400HPS347	400MH347	400PMH347
400HPS480	400MH480	400PMH480

*175PMH lamp not for use in horizontal lamp reflectors.

4 Finish:

Super TGIC powder coat paint over chromate conversion coating

Color:	Black	Dark Bronze	Light Gray	Platinum Silver	White	*Custom Colors
Cat. No.:	BL-P	DB-P	LG-P	PS-P	WH-P	CC-P

*Consult representative for custom colors.

5 Optional Glow Ring:

Cat. No.: **GR**

Diffuse tempered glass securely held between the Ballast Housing and the Reflector Housing with stainless steel fasteners and silicone gaskets.

6 Optional Photocell:

One per fixture required.

Line Volts:	120V	208V	240V	277V	480V	347V
Cat. No.:	A-30	A-31	A-32	A-33	A-34	A-35

7 Optional Convex Glass Lens:

For Horizontal Lamp Optical Systems.

Cat. No.: **CGL**

Tempered convex glass lens replaces standard flat lens. For horizontal lamp Type II, Type III, Type IV, and Type V distributions.

NOTE: Convex lens is standard on all Vertical Lamp Optical Systems.

8 Optional Polycarbonate Shield:

Cat. No.: **LS**

Polycarbonate Shield replaces standard tempered glass lens. 250 watt maximum. May be used with 400HPS in outdoor locations where ambient air temperature during fixture operation will not exceed 85°F.

9 Optional Houseside Shield:

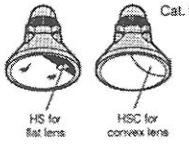

Cat. No.: **HS**

Recommended for use with clear lamps only. Effectiveness is reduced for coated lamps. Not for use with Type V (horizontal lamp) or symmetric (vertical lamp) light distributions.

Cat. No.: **HSC**

For use with all fixtures with convex glass lens. Not for use with Type V or symmetric light distributions.

10 Optional Fusing:

Line Volts:	120V	208V	240V	277V	347V	480V
Cat. No.:	SF	DF	DF	SF	SF	DF

11 Optional Slipfitter Arm Mounting:

RA17	Single Crook Arm	Side Arm Crook	Swept Arm
Configuration: and Cat. No.:	1A CSS-TM	1A CAS-TM1	1A SAS-TM1
		2B CAS-TM2	2B SAS-TM2
		3Y CAS-TM3	3Y SAS-TM3
		4C CAS-TM4	4C SAS-TM4

Requires 2" (2⅜" O.D.) Steel Tenon

RA25	Single Crook Arm	Side Arm Crook	Swept Arm
Configuration: and Cat. No.:	1A CSL-TM	1A CAL-TM1	1A SAL-TM1
		2B CAL-TM2	2B SAL-TM2
		3Y CAL-TM3	3Y SAL-TM3
		4C CAL-TM4	4C SAL-TM4

Requires 2½" (2⅞" O.D.) Steel Tenon

12 Poles

See pages **18 - 23** for complete ordering and specification information.

Pole Ordering Information and Specifications

CSS / CSL Stepped Aluminum Pole for Single Top Crook

Ordering Example:
For Standard CSS / CSL Pole

Pole Cat. No. and Mounting	Finish	Option
CSS10-534188A	DB-P	DR
1-2	3	4

1 Pole Catalog Numbers:

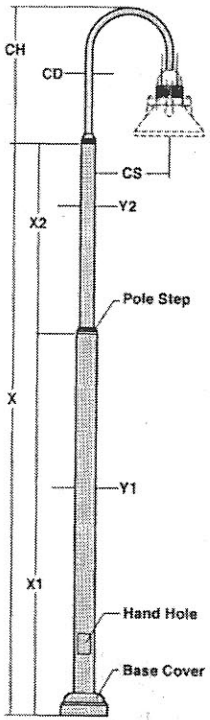

For RA17 Luminaires only

Pole Catalog Number	X	X1	X2	Y1	Y2	Wall Thickness	Bolt Circle Dia.	CH / Crook Height	CS / Crook Spacing	CD / Crook Dia.	Anchor Bolt Projection	Anchor Bolts	Base Cover Dia.	Conduit Opening Dia.	ALLOWABLE POLE EPA* 70 / 91	80 / 104	90 / 117	100 / 130	110 / 143
CSS10-534188	10'	6.5'	3.5'	5"	3.4"	.188"	8½"	34"	20"	1⅝"	3.2"	¾"x15"+3"	12"	3"	26	20	15	12	10
CSS12-534188	12'	8'	4'	5"	3.4"	.188"	8½"	34"	20"	1⅝"	3.2"	¾"x15"+3"	12"	3"	21	16	12	9.7	7.9
CSS14-534188	14'	9.3'	4.7'	5"	3.4"	.188"	8½"	34"	20"	1⅝"	3.2"	¾"x15"+3"	12"	3"	18	13	9.8	7.7	6.3
CSS16-534188	16'	10.5'	5.5'	5"	3.4"	.188"	8½"	34"	20"	1⅝"	3.2"	¾"x30"+4"	12"	3"	14	10	7.7	6.0	4.8
CSS20-534188	19.5'	13'	6.4'	5"	3.4"	.188"	8½"	34"	20"	1⅝"	3.2"	¾"x30"+4"	12"	3"	9.4	6.5	4.7	3.5	2.7

For RA25 Luminaires only

Pole Catalog Number	X	X1	X2	Y1	Y2	Wall Thickness	Bolt Circle Dia.	CH / Crook Height	CS / Crook Spacing	CD / Crook Dia.	Anchor Bolt Projection	Anchor Bolts	Base Cover Dia.	Conduit Opening Dia.	ALLOWABLE POLE EPA* 70 / 91	80 / 104	90 / 117	100 / 130	110 / 143
CSL20-64188	19.5'	13'	6.4'	6"	4"	.188"	10½"	46"	30"	2¾"	3.2"	¾"x30"+4"	14"	5"	15	10	7.7	5.9	4.6
CSL25-64188	25'	16.7'	8.3'	6"	4"	.188"	10½"	46"	30"	2¾"	3.2"	¾"x30"+4"	14"	5"	9.8	6.4	4.3	3.0	2.2
CSL30-64250	30'	20'	10'	6"	4"	.250"	10½"	46"	30"	2¾"	3.2"	¾"x30"+4"	14"	5"	11	7.1	4.7	3.2	2.3

NOTE: All allowable pole and fixture EPAs (Effective Projected Area, which is Fixture Area x Drag Factor) are derived from the AASHTO standard (American Association of State Highway and Transportation Officials). Responsibility lies with the specifier for correct pole selection based on local codes and standards for the job location (See page **22**).

* Thickness at **Y1** section, **Y2** section is .188".

Gusting Wind Equivalent — **110 / 143**
Wind Map Steady Wind —

2 Mounting Arrangements:

Plan View:

Mounting Cat. No.:		A
EPA:	RA17	0.8
	RA25	1.5

***NOTE: ALLOWABLE POLE EPA** for jobsite wind conditions must be equal to or greater than fixture mount EPA.

3 Pole Finish:

Super TGIC powder coat paint over chromate conversion coating.

Color:	Black	Dark Bronze	Light Gray	Platinum Silver	White	*Custom Colors
Cat. No.:	**BL-P**	**DB-P**	**LG-P**	**PS-P**	**WH-P**	**CC-P**

*Consult representative for custom colors.

4 Optional Duplex Receptacle

Mounted opposite the handhole in a cast aluminum box, internally welded and sealed with a gasketed self-closing cover and locking bracket.

DR Duplex Receptacle rated 15A., 125V.
DR-GFI Duplex Receptacle with Ground Fault Circuit Interrupter rated 15A., 125V.

Pole Ordering Information and Specifications

CAS / CAL Stepped Aluminum Pole for Side Mount Crooks

Ordering Example:
For Standard CAS / CAL Pole

Pole Cat. No. and Mounting		Finish		Option
CAS10-534188B	/	**DB-P**	/	**DR**
1-2		3		4

1 Pole Catalog Numbers:

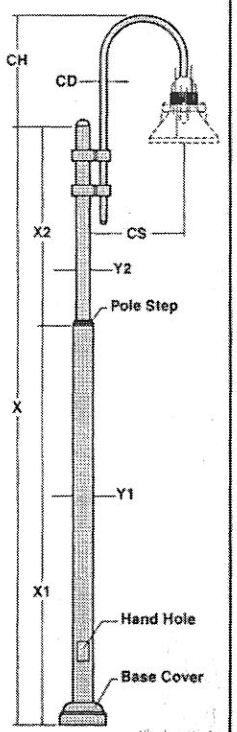

For RA17 Luminaires only

Pole Catalog Number	X	X1	X2	Y1	Y2	Wall Thickness	Bolt Circle Dia.	CH / Crook Height	CS / Crook Spacing	CD / Crook Dia.	Anchor Bolt Projection	Anchor Bolts	Base Cover Dia.	Conduit Opening Dia.	ALLOWABLE POLE EPA* 70 / 91	80 / 104	90 / 117	100 / 130	110 / 143
CAS10-534188	10'	6.5'	3.5'	5"	3.4"	.188"	8½"	26"	25"	1⅝"	3.2"	¾"x15"+3"	12"	3"	26	20	15	12	10
CAS12-534188	12'	8'	4'	5"	3.4"	.188"	8½"	26"	25"	1⅝"	3.2"	¾"x15"+3"	12"	3"	21	16	12	9.7	7.9
CAS14-534188	14'	9.3'	4.7'	5"	3.4"	.188"	8½"	26"	25"	1⅝"	3.2"	¾"x15"+3"	12"	3"	18	13	9.8	7.7	6.3
CAS16-534188	16'	10.5'	5.5'	5"	3.4"	.188"	8½"	26"	25"	1⅝"	3.2"	¾"x30"+4"	12"	3"	14	10	7.7	6.0	4.8
CAS20-534188	19.5'	13'	6.4'	5"	3.4"	.188"	8½"	26"	25"	1⅝"	3.2"	¾"x30"+4"	12"	3"	9.4	6.5	4.7	3.5	2.8

For RA25 Luminaires only

Pole Catalog Number	X	X1	X2	Y1	Y2	Wall Thickness	Bolt Circle Dia.	CH / Crook Height	CS / Crook Spacing	CD / Crook Dia.	Anchor Bolt Projection	Anchor Bolts	Base Cover Dia.	Conduit Opening Dia.	ALLOWABLE POLE EPA* 70 / 91	80 / 104	90 / 117	100 / 130	110 / 143
CAL20-64188	19.5'	13'	6.4'	6"	4"	.188"	10½"	37"	36"	2⅛"	3.2"	¾"x30"+4"	14"	5"	15	10	7.7	5.9	4.6
CAL25-64188	25'	16.7'	8.3'	6"	4"	.188"	10½"	37"	36"	2⅛"	3.2"	¾"x30"+4"	14"	5"	9.8	6.4	4.3	3.0	2.2
CAL25-64250	25'	16.7'	8.3'	6"	4"	.250"*	10½"	37"	36"	2⅛"	3.2"	¾"x30"+4"	14"	5"	14	9.8	7.0	5.2	4.0
CAL30-64250	30'	20'	10'	6"	4"	.250"*	10½"	37"	36"	2⅛"	3.2"	¾"x30"+4"	14"	5"	11	7.1	4.7	3.2	2.3
CAL30-64400	30'	20'	10'	6"	4"	.400"*	10½"	37"	36"	2⅛"	3.2"	¾"x30"+4"	14"	5"	18	12	9.1	6.7	5.2

NOTE: All allowable pole and fixture EPAs (Effective Projected Area, which is Fixture Area x Drag Factor) are derived from the AASHTO standard (American Association of State Highway and Transportation Officials). Responsibility lies with the specifier for correct pole selection based on local codes and standards for the job location (See page **22**).

* Thickness at **Y1** section, **Y2** section is .188".

* Pole reinforced, to 40" above base, to .400", remaining **Y1** section is .250", **Y2** section is .188".

Gusting Wind Equivalent —
Wind Map Steady Wind — **110 / 143**

2 Mounting Arrangements:

Plan View:

Mounting Cat. No.:		A	B	Y	C
EPA:	RA17	0.8	1.6	2.4	2.8
	RA25	1.5	3.0	4.5	5.2

***NOTE: ALLOWABLE POLE EPA** for jobsite wind conditions must be equal to or greater than fixture mount EPA.

3 Pole Finish:

Super TGIC powder coat paint over chromate conversion coating.

Color:	Black	Dark Bronze	Light Gray	Platinum Silver	White	*Custom Colors
Cat. No.:	**BL-P**	**DB-P**	**LG-P**	**PS-P**	**WH-P**	**CC-P**

*Consult representative for custom colors.

4 Optional Duplex Receptacle

Mounted opposite the handhole in a cast aluminum box, internally welded and sealed with a gasketed self-closing cover and locking bracket.

DR Duplex Receptacle rated 15A., 125V.
DR-GFI Duplex Receptacle with Ground Fault Circuit Interrupter rated 15A., 125V.

Pole Ordering Information and Specifications

SAS / SAL Stepped Aluminum Pole for Swept Arm Mounts

Ordering Example:
For Standard SAS / SAL Pole

Pole Cat. No. and Mounting	Finish	Option
SAS10-534188B	DB-P	DR
1-2	3	4

1 Pole Catalog Numbers:

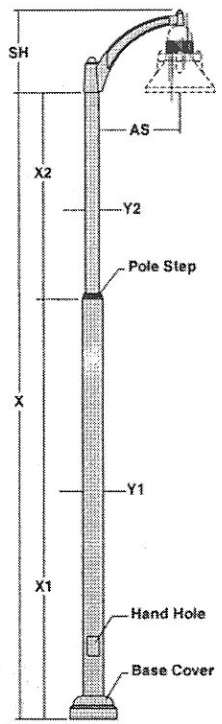

For RA17 Luminaires only

Pole Catalog Number	X	X1	X2	Y1	Y2	Wall Thickness	Bolt Circle Dia.	SH / Swept Height	AS / Arm Spacing	Anchor Bolt Projection	Anchor Bolts	Base Cover Dia.	Conduit Opening Dia.	ALLOWABLE POLE EPA* 70 / 91	80 / 104	90 / 117	100 / 130	110 / 143
SAS10-534188	10'	6.5'	3.5'	5'	3.4'	.188"	8½"	22"	23½"	3.2"	¾x15"+3"	12"	3"	26	20	15	12	10
SAS12-534188	12'	8'	4'	5'	3.4'	.188"	8½"	22"	23½"	3.2"	¾x15"+3"	12"	3"	21	16	12	9.7	7.9
SAS14-534188	14'	9.3'	4.7'	5'	3.4'	.188"	8½"	22"	23½"	3.2"	¾x15"+3"	12"	3"	18	13	9.8	7.7	6.3
SAS16-534188	16'	10.5'	5.5'	5'	3.4'	.188"	8½"	22"	23½"	3.2"	¾x30"+4"	12"	3"	14	10	7.7	6.0	4.8
SAS20-534188	19.5'	13'	6.4'	5'	3.4'	.188"	8½"	22"	23½"	3.2"	¾x30"+4"	12"	3"	9.4	6.5	4.7	3.5	2.8

For RA25 Luminaires only

Pole Catalog Number	X	X1	X2	Y1	Y2	Wall Thickness	Bolt Circle Dia.	SH / Swept Height	AS / Arm Spacing	Anchor Bolt Projection	Anchor Bolts	Base Cover Dia.	Conduit Opening Dia.	ALLOWABLE POLE EPA* 70 / 91	80 / 104	90 / 117	100 / 130	110 / 143
SAL20-64188	19.5'	13'	6.4'	6'	4'	.188"	10½"	28"	30"	3.2"	¾x30"+4"	14"	5"	15	10	7.7	5.9	4.6
SAL25-64188	25'	16.7'	8.3'	6'	4'	.188"	10½"	28"	30"	3.2"	¾x30"+4"	14"	5"	9.8	6.4	4.3	3.0	2.2
SAL25-64250	25'	16.7'	8.3'	6'	4'	.250"	10½"	28"	30"	3.2"	¾x30"+4"	14"	5"	14	9.8	7.0	5.2	4.0
SAL30-64250	30'	20'	10'	6'	4'	.250"	10½"	28"	30"	3.2"	¾x30"+4"	14"	5"	11	7.1	4.7	3.2	2.3
SAL30-64400	30'	20'	10'	6'	4'	.400"	10½"	28"	30"	3.2"	¾x30"+4"	14"	5"	18	12	9.1	6.7	5.2

NOTE: All allowable pole and fixture EPAs (Effective Projected Area, which is Fixture Area x Drag Factor) are derived from the AASHTO standard (American Association of State Highway and Transportation Officials). Responsibility lies with the specifier for correct pole selection based on local codes and standards for the job location (See page **22**).

[1] Thickness at **Y1** section, **Y2** section is .188".
[2] Pole reinforced, to 40" above base, to .400", remaining **Y1** section is .250", **Y2** section is .188".

Gusting Wind Equivalent — 110 / 143
Wind Map Steady Wind — 110 / 143

2 Mounting Arrangements:

Plan View:

Mounting Cat. No.:	A	B	Y	C
EPA: RA17	0.8	1.6	2.4	2.8
RA25	1.5	3.0	4.5	5.2

*NOTE: ALLOWABLE POLE EPA for jobsite wind conditions must be equal to or greater than fixture mount EPA.

3 Pole Finish:

Super TGIC powder coat paint over chromate conversion coating.

Color:	Black	Dark Bronze	Light Gray	Platinum Silver	White	*Custom Colors
Cat. No.:	BL-P	DB-P	LG-P	PS-P	WH-P	CC-P

*Consult representative for custom colors.

4 Optional Duplex Receptacle

Mounted opposite the handhole in a cast aluminum box, internally welded and sealed with a gasketed self-closing cover and locking bracket.

DR Duplex Receptacle rated 15A., 125V.
DR-GFI Duplex Receptacle with Ground Fault Circuit Interrupter rated 15A., 125V.

Proportion Guide

70 to 400 Watt / 10′ to 30′ Poles

This proportion diagram is intended to help visualize and select the best Era system to satisfy aesthetic requirements. Remember, the pole height also affects performance; the higher the fixture is mounted, the greater the light throw. If poles are mounted on concrete pedestals such as in parking lots, the height of the pedestal must be considered in selecting the pole height.

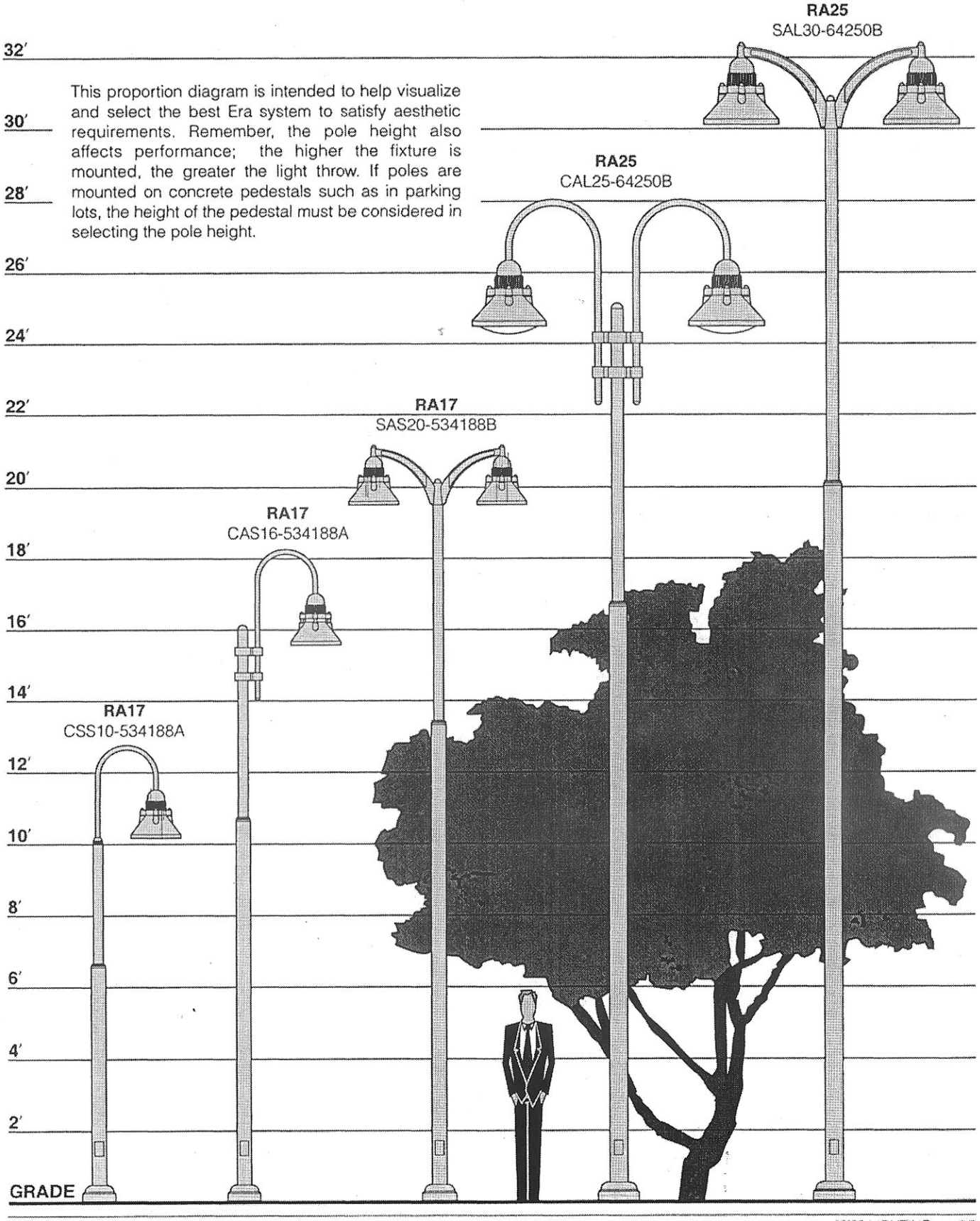

VILLAGE AND BUILDING ACCENT LIGHTING

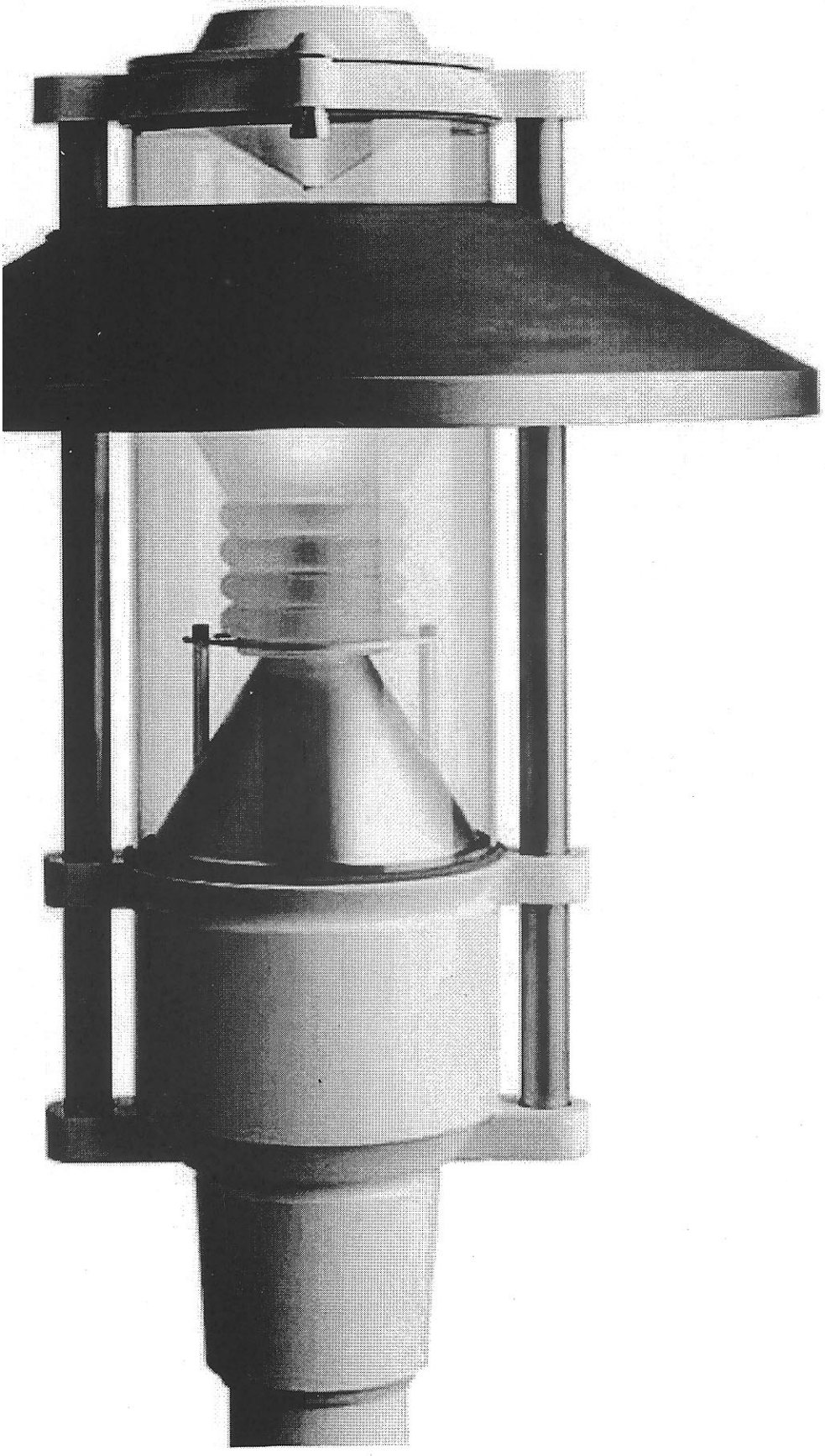

SPECTRA™

ARCHITECTURAL
AREA
LIGHTING

14249 ARTESIA BLVD
LA MIRADA, CA 90638
714.994.2700 • fax 714.994.0522
www.aal.net

HUBBELL®

Lighting, Inc.

MADE IN U.S.A.

SPECTRA

3 SCALES

The Spectra is a fixture program allowing you to configure a look in harmony with your architecture. The SP1 and SP2 offers you the freedom to specify the size, finish and optics to compliment to your design. The SP10 is a high wattage fixture designed to illuminate parking areas of the site using taller poles and wider spacing.

SP1

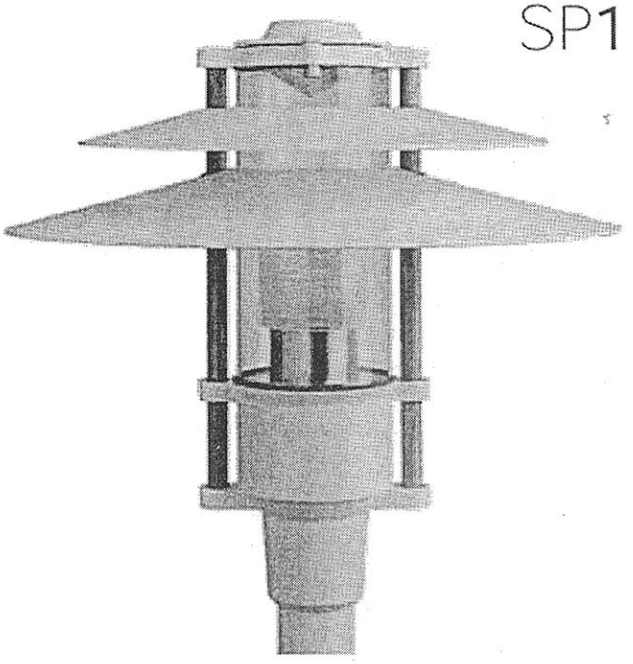

LARGE SCALE

MOUNTING OPTIONS

- Post top
- Post mounted arm
- Wall mounted arm

LAMP OPTIONS

- 50-175 watt metal halide
- 50-150 high pressure sodium

SP2

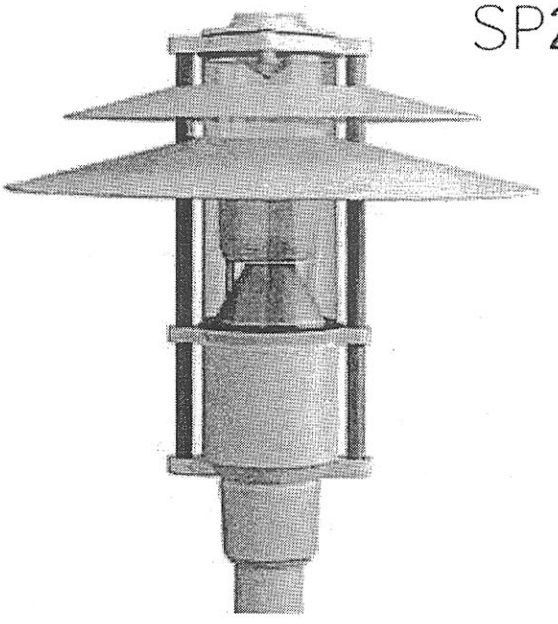

SMALL SCALE

MOUNTING OPTIONS

- Post top
- Wall mounted arm

LAMP OPTIONS

- 42 watt CF
- 50-100 watt metal halide
- 50-100 high pressure sodium

SP10 VERY LARGE SCALE (see page 20)

- Post top

LAMP OPTIONS

- 150-250 watt metal halide
- 150-250 high pressure sodium

SP1 + SP2 Configured by you

SPECTRA™

Hood Material

PAINTED TO MATCH BODY

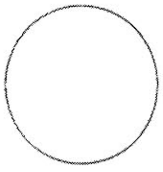

COP
NATURAL COPPER
WILL PATINA
OVER TIME

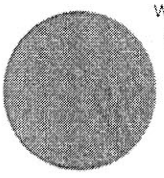

STS
BRUSHED STAINLESS
STEEL

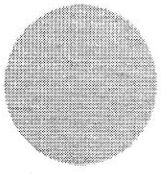

Hood Selection

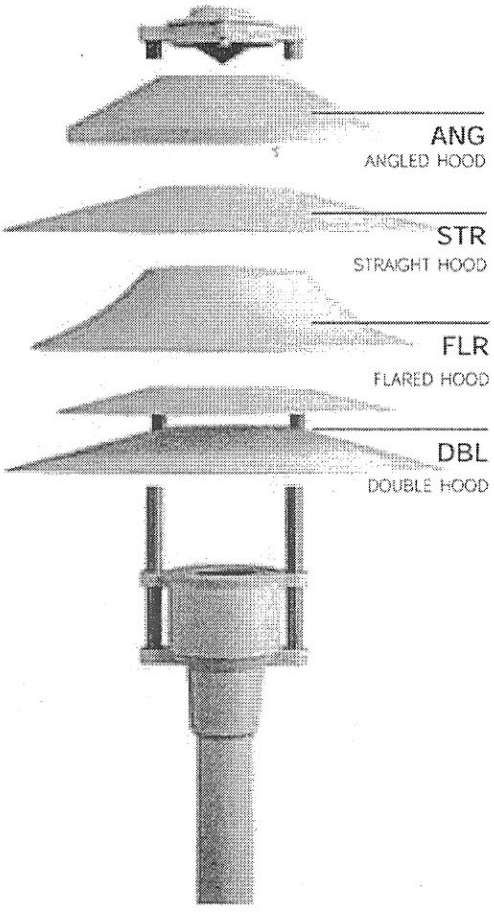

Optics

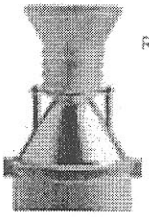

GLA
ROSTED GLASS
DIFFUSER

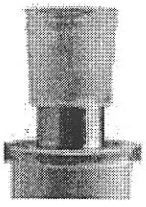

GR3
GLASS
REFRACTOR
TYPE 3

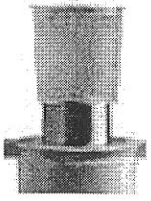

GR5
GLASS
REFRACTOR
TYPE 5

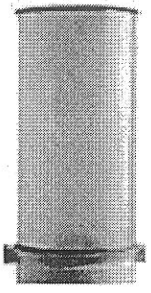

LDL
LIGHTLY
DIFFUSED
LENS

SPECTRA

Indirect

The Spectra Indirect has a concealed light source for smooth, glare free illumination. A perfect solution for pathways, gardens and interior applications. The enclosed optical module eliminates the problem of light deterioration common on open lens indirect fixtures. A small amount of spill light softly illuminates the top of the shade.

SP1/IND

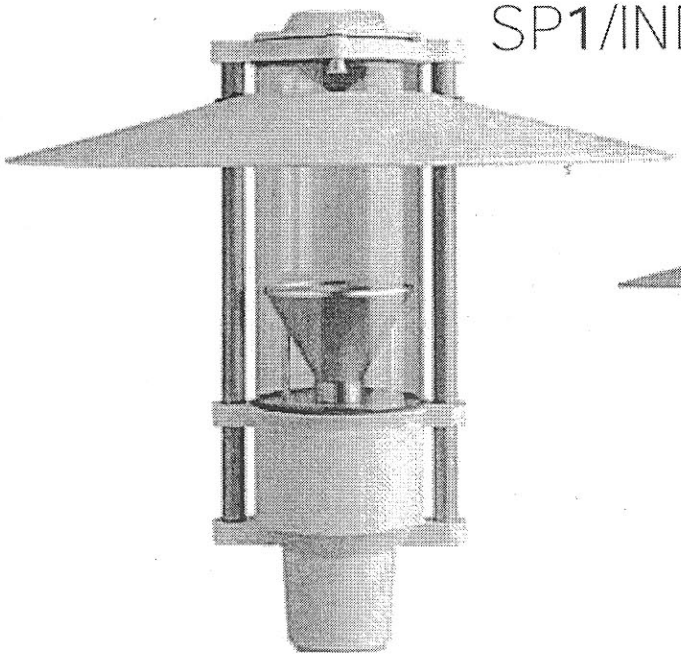

SP2/IND

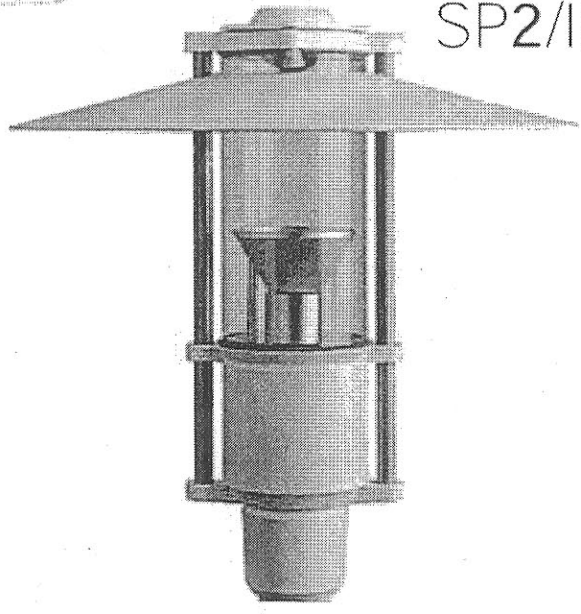

- Available in a symmetric or asymmetric distribution

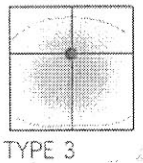

TYPE 3

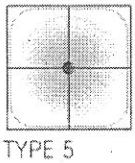

TYPE 5

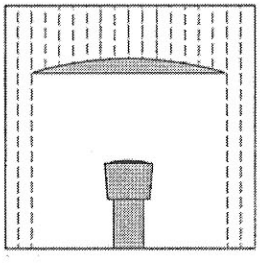

The Spectra has an enclosed optical module eliminating the problem of light deterioration. Open lens indirect fixtures accumulate dust and insects which are not easily removed by rain because of the upper reflector hood.

Designed for lasting perform-

SPECTRA™

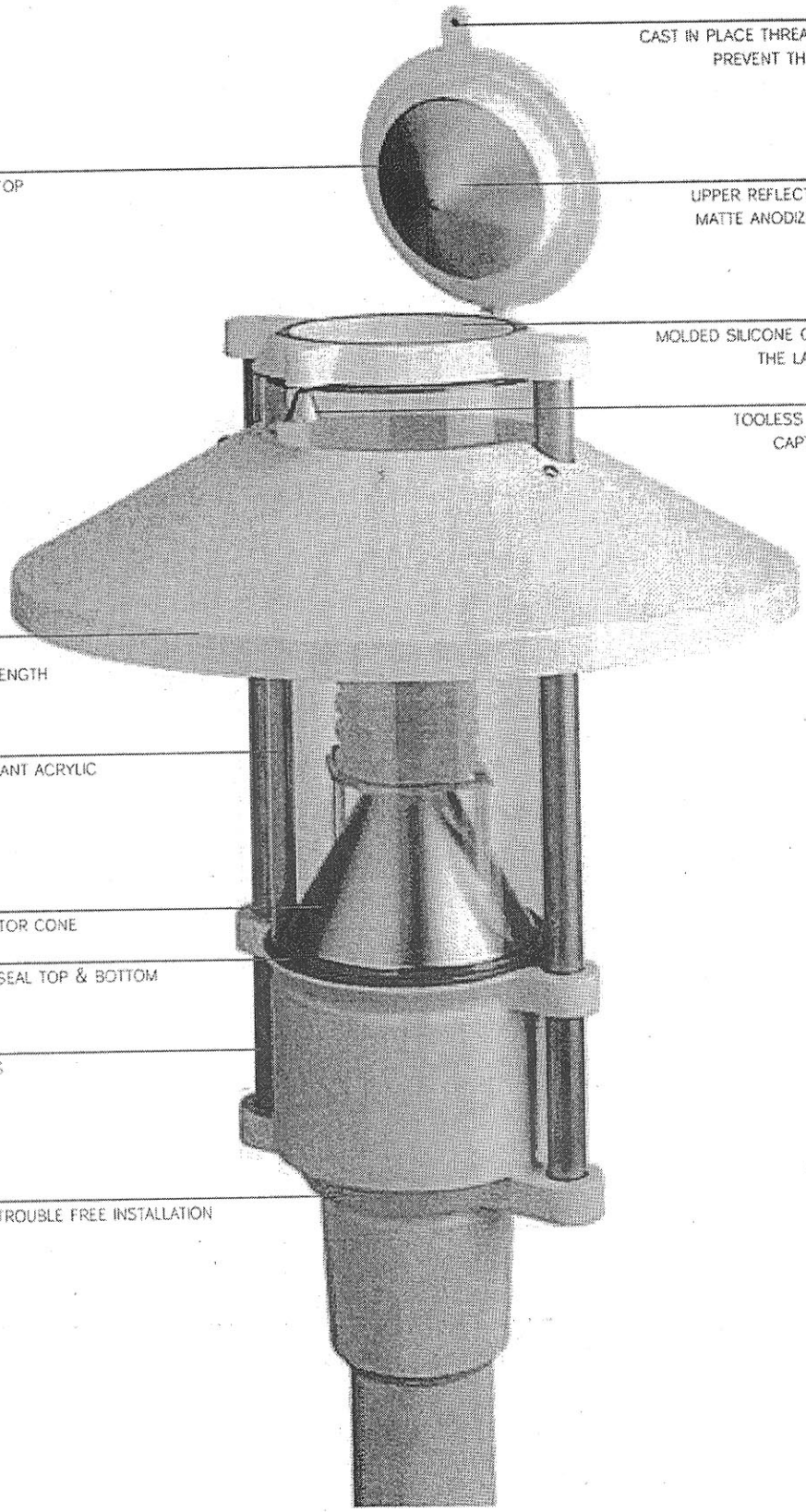

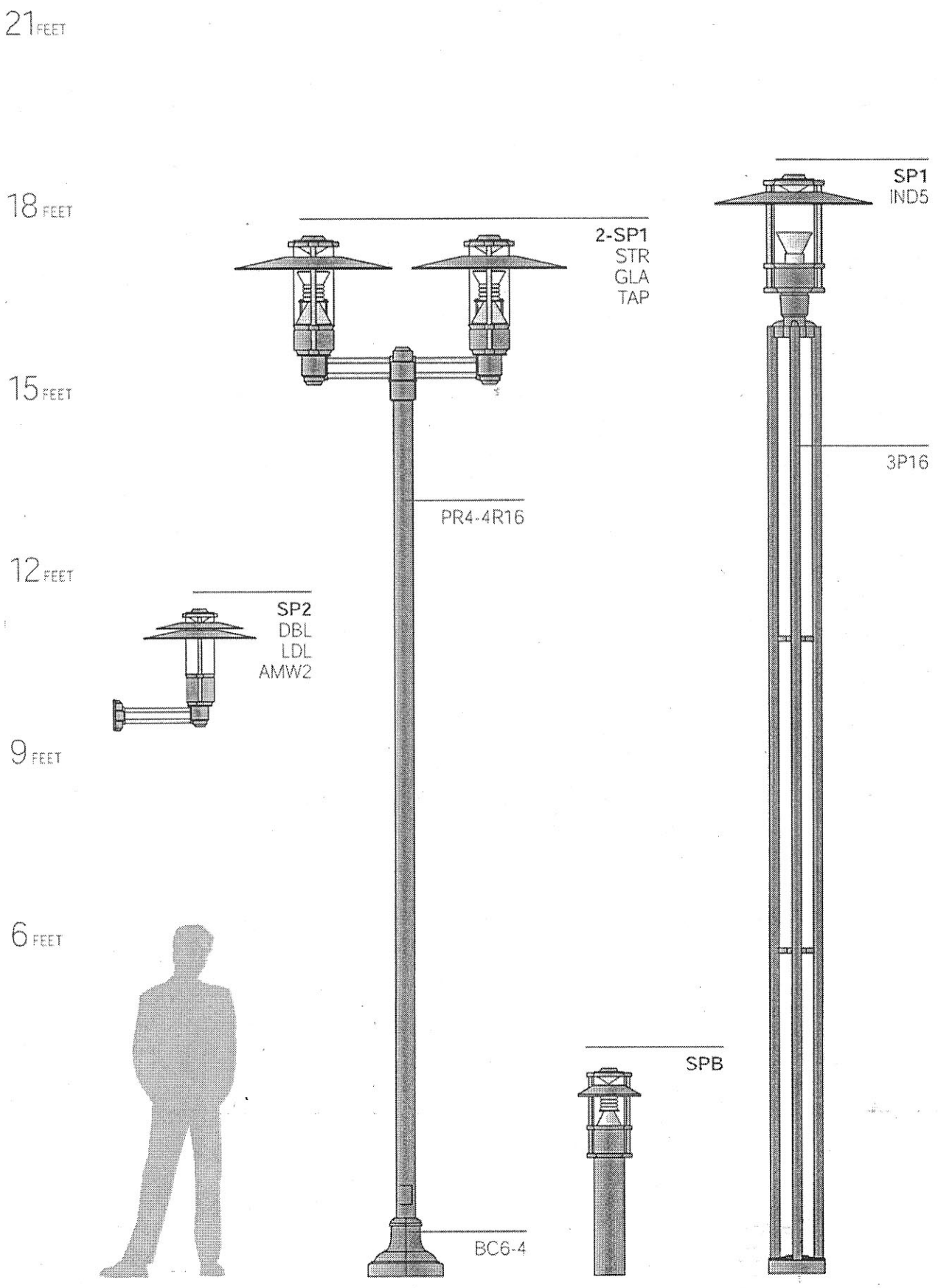
21 FEET
18 FEET
15 FEET
12 FEET
9 FEET
6 FEET
2-SP1
STR
GLA
TAP
PR4-4R16
SP1
IND5
3P16
SP2
DBL
LDL
AMW2
SPB
BC6-4

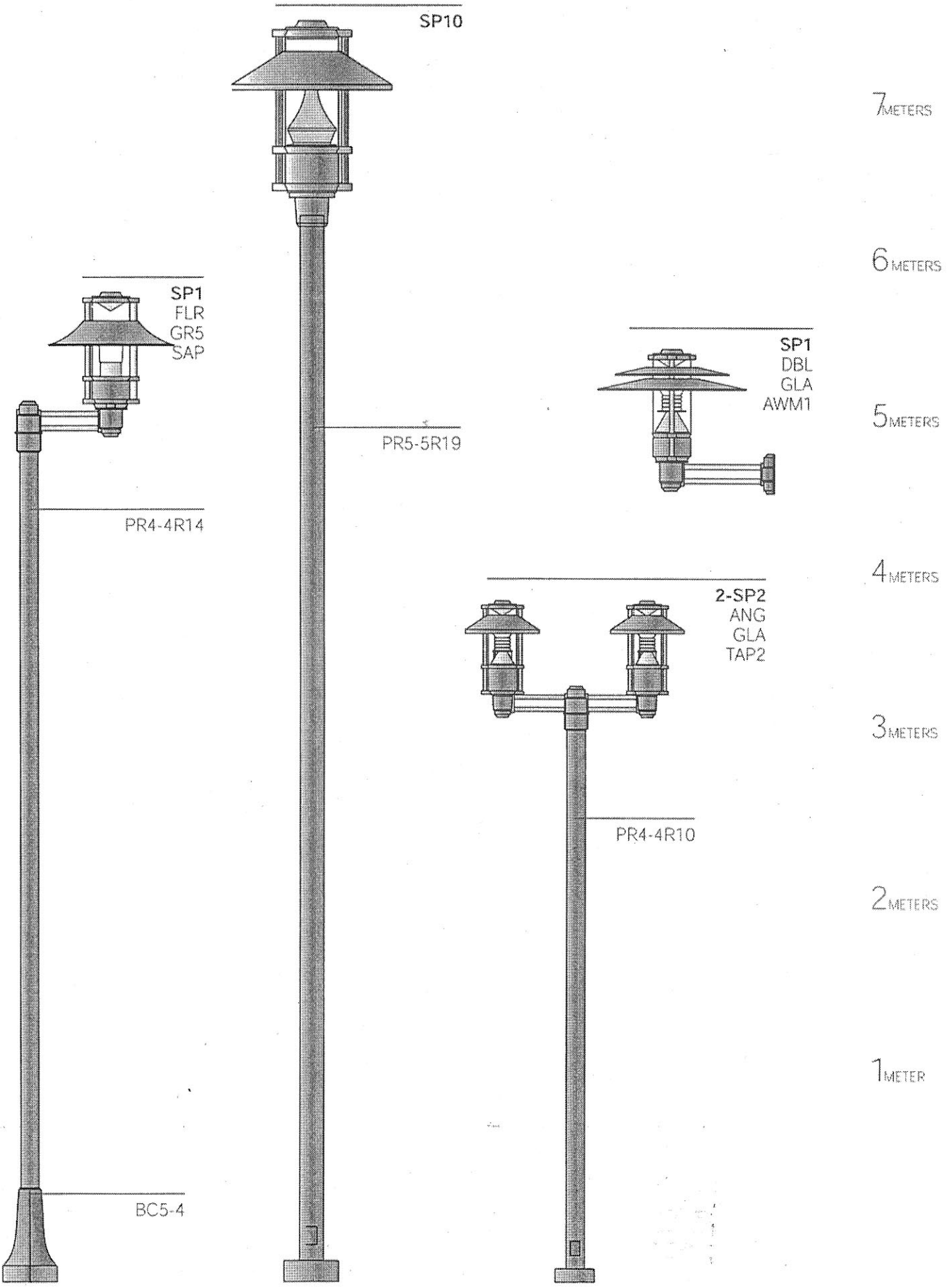
SP10
PR5-5R19
SP1
FLR
GR5
SAP
PR4-4R14
BC5-4
SP1
DBL
GLA
AWM1
2-SP2
ANG
GLA
TAP2
PR4-4R10
7METERS
6METERS
5METERS
4METERS
3METERS
2METERS
1METER

SPECTRA™

1 Fixture Size

SP1
HEIGHT=29.2"/ 740 MM
EPA= 2.27
WEIGHT=46 LBS.
IP = 65

SP2
HEIGHT=23.9"/ 610 MM
EPA=1.43
WEIGHT=35 LBS.
IP = 65

SP10
ORDERING INFORMATION ON PAGE 20.

2 Hood Style

ANG
ANGLED HOOD

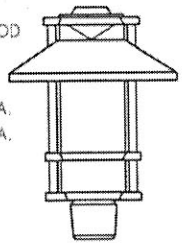

SP1=22"DIA.
SP2=16"DIA.

FLR
FLARED HOOD

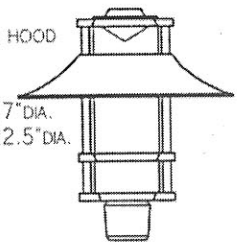

SP1=27"DIA.
SP2=22.5"DIA.

STR
STRAIGHT HOOD

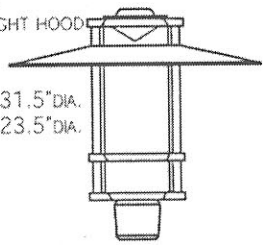

SP1=31.5"DIA.
SP2=23.5"DIA.

DBL
DOUBLE HOOD

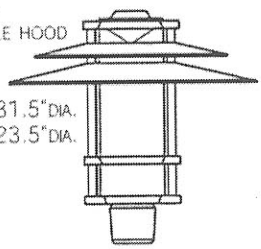

SP1=31.5"DIA.
SP2=23.5"DIA.

IND
INDIRECT

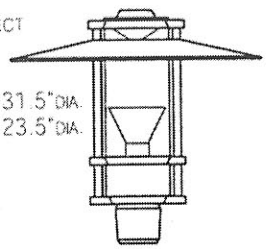

SP1=31.5"DIA.
SP2=23.5"DIA.

3 Lens/Element

GLA FROSTED GLASS DIFFUSER

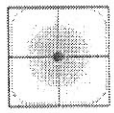

Type 5 Light Pattern

GR3 GLASS REFRACTOR

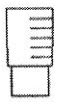

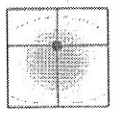

Type 3 Light Pattern

GR5 GLASS REFRACTOR

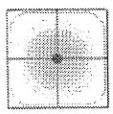

Type 5 Light Pattern

LDL LIGHTLY DIFFUSED LENS

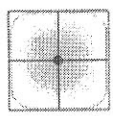

Type 5 Light Pattern

-3 INDIRECT TYPE 3

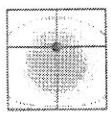

Type 3 Light Pattern

-5 INDIRECT TYPE 5

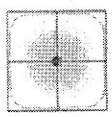

Type 5 Light Pattern

4 Lamp/Ballast

42CF
120/277 electronic ballast for use with 4 pin, 32 or 42 watt T-4 compact fluorescent lamps.

50MH
50 watt metal halide multitap ballast, 120/277 volt.

70MH
70 watt metal halide multitap ballast, 120/208/240/277 volt.

70MHT6
70 watt metal halide multitap ballast, 120/277 volt. Uses a G12 base, clear T-6 ceramic MH lamp.

100MH
100 watt metal halide multitap ballast, 120/208/240/277 volt.

150MH (SP1 only)
150 watt metal halide multitap ballast, 120/208/240/277 volt.

150MH T6 (SP1 only)
150 watt metal halide multitap ballast, 120/208/240/277 volt. Uses a G12 base, clear T-6 ceramic MH lamp.

175MH (SP1 only)
175 watt metal halide multitap ballast, 120/208/240/277 volt.

50HPS
50 watt high pressure sodium multitap ballast, 120/277 volt.

70HPS
70 watt high pressure sodium multitap ballast, 120/208/240/277 volt.

100HPS
100 watt high pressure sodium multitap ballast, 120/208/240/277 volt.

150HPS (SP1 only)
150 watt high pressure sodium multitap ballast, 120/208/240/277 volt.

INC
Incandescent
150 watt maximum for SP1
100 watt maximum for SP2

Lamps not included. Unless noted, use ED-17 lamps.

All ballasts prewired for 277 volts.

SP1/SP2 Ordering Information

SPECTRA™

5 Color

Standard colors are shown. RAL and custom colors are available at an extra cost. Colors are only approximate due to variations of printing inks.

WHT WHITE

BLK BLACK

DBZ DARK BRONZE

LGY LIGHT GRAY

DGN DARK GREEN

ATG ANTIQUE GREEN

VGN VERDE GREEN

MAL MATTE ALUMINUM

CRT CORTEN

GALV GALVANIZED

6 Hood Finish

All styles of reflector hoods are available in the matching fixture color, stainless steel or natural copper finishes. The natural copper and stainless steel hoods are unfinished, including the underside of the hood, to develop a patina over time. This allows the rich metal color to be seen from lower viewing angles without compromising light output when illuminated. Painted hoods have the underside finished in high reflectance white. All indirect fixtures (IND) have the underside of the reflector hood painted white, whether painted, stainless or copper to insure proper light output.

FIXTURE COLOR

STS STAINLESS STEEL

COP SATIN NATURAL COPPER

7 Options

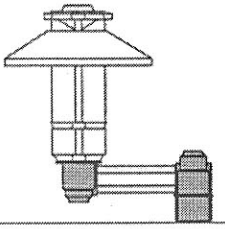

SAP1 ARM MOUNT FOR SP1
Designed to slip over a 4"/100mm diameter pole.

SAP2 ARM MOUNT FOR SP2
Designed to slip over a 4"/100mm diameter pole.

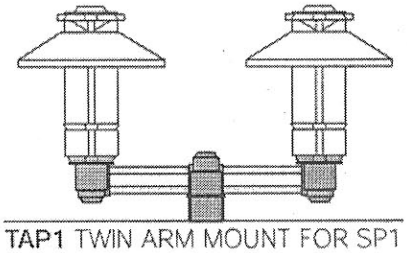

TAP1 TWIN ARM MOUNT FOR SP1
Designed to slip over a 4"/100mm diameter pole.

TAP2 TWIN ARM MOUNT FOR SP2
Designed to slip over a 4"/100mm diameter pole.

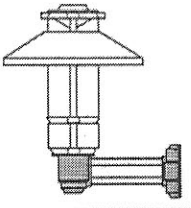

AWM1 WALL MOUNTED ARM FOR SP1

AWM2 WALL MOUNTED ARM FOR SP2

347 347 VOLT BALLAST 120/227/347

TA TENON ADAPTOR FOR SP2
Designed to slip over a 4"/100mm diameter pole.

Arm Details

SPECTRA

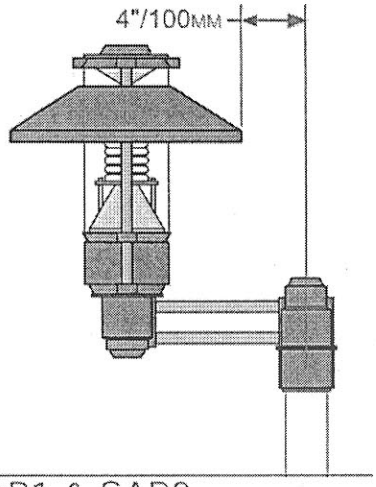

SAP1 & SAP2

SAP1 & SAP2 slips over a 4"/100mm pole. SAP1 is for SP1 & SAP2 is for SP2.
WEIGHT=9LBS. EPA=.63

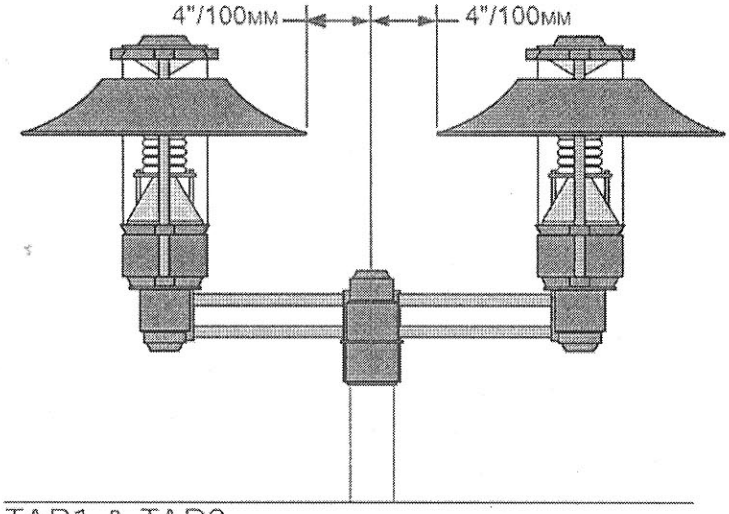

TAP1 & TAP2

TAP1 & TAP2 slips over a 4"/100mm pole. TAP1 is for SP1 & TAP2 is for SP2.
WEIGHT=12 LBS. EPA=.83

All arms regardless of hood diameter, have a 4"/100MM distance from the edge of the shade to the pole centerline or face of the wall.

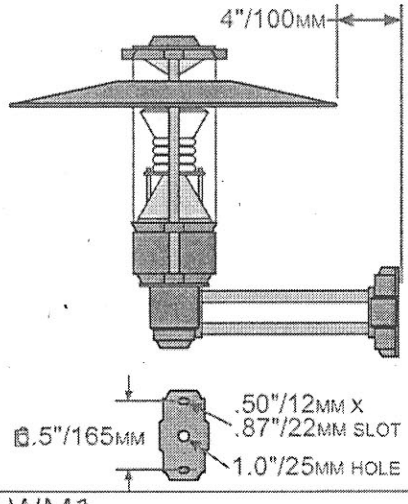

AWM1

Wall mounted arm for SP1.
Wall plate is 8.5"/216MM x 4.75"/120MM
WEIGHT=8LBS.

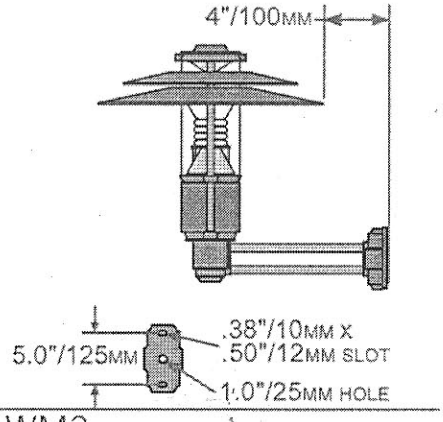

AWM2

Wall mounted arm for SP2.
Wall plate is 6.37"/162MM x 3.5"/89MM
WEIGHT=5LBS.

SPECTRA

SP10 VERY LARGE SCALE

SP10

The SP10 is a very large scale unit utilizing the Moldcast Pericline® optics with a type 5 distribution. The SP10 is only available with a painted 32" diameter angled hood (to conceal the upper reflector) in a painted finish. The fixture slips over 5"/127mm O.D. pole and is secured with six stainless steel set screws.

DIMENSIONS: 41.25"/1050MM HIGH X 32"/ 815MM DIAMETER

EPA: 4.0 WEIGHT: 65 LBS IP = 54

OPTIONS

347	120/277/347 VOLT BALLAST
ASY	Asymmetic Distribution-Field Installed
HSS	House Side Shield-Field Installed.

Examples

FIXTURE	LAMP/BALLAST	COLOR	OPTIONS
SP10	250MH	MAL	•
SP10	150HPS	BLK	HSS90

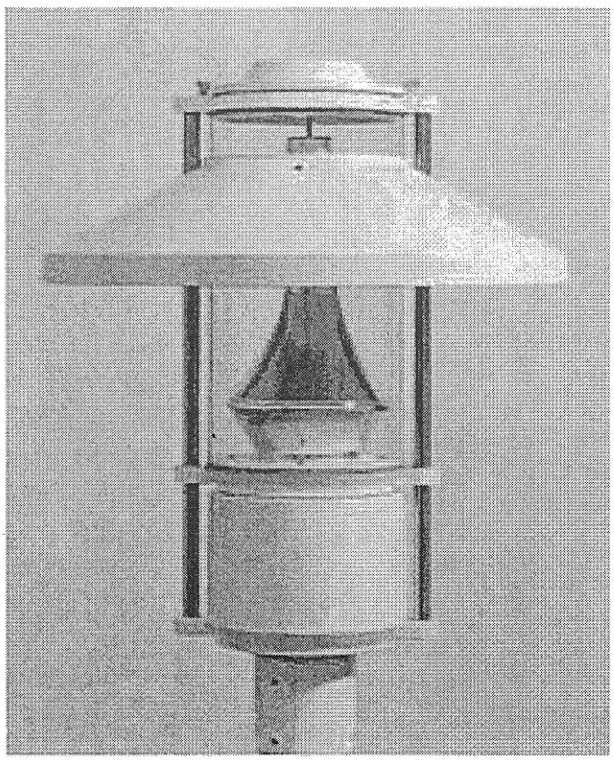

Lamp/Ballast

150MH
150 watt metal halide multitap ballast, 120/208/240/277 volt. Use an ED-28 lamp.

175MH
175 watt metal halide multitap ballast, 120/208/240/277 volt. Use an ED-28 lamp.

250MH
250 watt metal halide multitap ballast, 120/208/240/277 volt. Use an ED-28 lamp.

150HPS
150 watt high pressure sodium multitap ballast, 120/208/240/277 volt. Use an ED-23 1/2 lamp.

250HPS
250 watt high pressure sodium multitap ballast, 120/208/240/277 volt. Use an ED-18 lamp.

Lamps not included.

All ballasts prewired for 277 volts.

SEE MATERIAL AND COLOR BOARDS
ON THE FOLLOWING PAGES

mcg architecture
T 720.529.8768 F 720.529.8774
5300 DTC Parkway, Suite 450, Greenwood Village, CO 80111-3023

CLIENT:

Jordon Perlmutter & Co.
1601 BLAKE STREET
DENVER, COLORADO 808202
PHONE: 303.595.9919
FAX: 303.595.3435

ARCHITECTURAL DESIGN
STANDARDS - APPENDIX

LARKRIDGE
THORNTON, COLORADO

LARKRIDGE

No.	Description	Date

Project No.:

Date: 06.04.04

Scale: N.T.S.

Sheet Title:

MATERIAL AND
COLOR BOARDS

Sheet #:

2.7.11

XREF:
FILE PATH:

MATERIALS LEGEND

STANDING SEAM MTL. ROOF #1	PAC-CLAD - SILVER
STANDING SEAM MTL. ROOF #2	PAC-CLAD - WEATHERED ZINC
STANDING SEAM MTL. ROOF #1	PAC-CLAD - AGED COPPER
STANDING SEAM MTL. ROOF #1	PAC-CLAD - DARK BRONZE
STANDING SEAM MTL. ROOF #1	SILVER
CMU #1	BASALITE - GROUND FACE #720
CMU #2	BASALITE - SPLIT FACE #339
CMU #3	BASALITE - GROUND FACE #339
CMU #4	BASALITE - SPLIT FACE #826
CMU #5	BASALITE - SPLIT FACE #639
CMU #6	BASALITE - GROUND FACE #639
CMU #7	BASALITE - SPLIT FACE #661
EFS #1	DRYVIT - #103 NATURAL WHITE
EFS #2	DRYVIT - #SW6150 UNIVERSAL KHAKI
EFS #3	DRYVIT - #111 PRAIRIE CLAY
EFS #4	DRYVIT - #526A FERN RIDGE
EFS #5	DRYVIT - #139 ADOBE ACCENT
EFS #6	DRYVIT - #365 IRISH COFFEE
EFS #7	DRYVIT - #SW6033 BATEAU BROWN
STOREFRONT	CLEAR ANODIZED ALUM
CONC #1	DAVIS COLOR - SANDSTONE
CONC #2	DAVIS COLOR - COCOA
CONC #3	DAVIS COLOR - KAHLUA

DATE: 06.21.04
MCG JOB #: 03.088.01

DATE	REVISIONS

NOTE: This information is conceptual in nature and is subject to adjustments pending further verification and Client, Tenant, and Governmental Agency approvals. No warranties or guarantees of any kind are given or implied by the Architect.

MATERIALS

LARKRIDGE

THORNTON, COLORADO

JORDON PERLMUTTER & CO
1601 BLAKE STREET, STE 600
DENVER, COLORADO 80202

5300 DTC Parkway, Suite 450
Greenwood Village, Colorado 80111-3023
T: 720.529.8768 F: 720.529.8774
mcgarchitecture.com

Shale
Country Ledgestone
(CSV-20044)

Cultured Stone®

CULTURED STONE®

CULTURED STONE CORPORATION P.O. BOX 270 NAPA CA 94559 1-800-255-1727